Go To Table Of Contents

417

-001 thru -003

Power Podiatry Treatment Table

MIDMARK®

Service and Parts Manual

Serial Number Prefixes:
BP, EP & V

417 -001 thru -003

FOR USE BY MIDMARK TRAINED TECHNICIANS ONLY

SF-1399 Style B

Part No. 003-0709-00 Rev. R (2/23/16)

Go To Table Of Contents

TABLE OF CONTENTS

Section/Paragraph	Page
IMPORTANT INSTRUCTIONS	
General Safety Instructions	iii
Warnings	iii
Warranty Instructions	iii
SECTION I GENERAL INFORMATION	
1.1 Scope of Manual	1-1
1.2 How to Use Manual	1-1
1.3 Description of 417 Power Podiatry Treatment Chair	1-1
1.4 Specifications	1-5
1.5 Parts Replacement Ordering	1-5
1.6 Special Tools	1-6
SECTION II TESTING AND TROUBLESHOOTING	
2.1 Operational Test	2-1
2.2 Troubleshooting Procedures	2-3
SECTION III SCHEDULED MAINTENANCE	
3.1 Scheduled Maintenance	3-1
SECTION IV MAINTENANCE/SERVICE INSTRUCTIONS	
4.1 Introduction	4-1
4.2 Reinitialization Procedure	4-1
4.3 Table Top Removal / Installation	4-2
4.4 Shrouds Removal / Installation	4-3
4.5 Power Cord Removal / Installation	4-4
4.6 Control Disable Switch Removal / Installation	4-5
4.7 Hand Control Plug-In Port Removal / Installation	4-5
4.8 PC Control Board / Program PC Board Removal / Installation	4-6
4.9 Foot Control Plug-In Port Removal / Installation	4-7
4.10 Base Down Limit Switch Removal / Installation	4-8
4.11 Actuator Motor / Actuator Brake Removal / Installation	4-8
4.12 Base Actuator Assembly Removal / Installation	4-10
4.13 Gas Spring Removal / Installation	4-12
4.14 Base Capacitor Removal / Installation	4-13
4.15 Tilt Actuator Assembly Removal / Installation	4-14
4.16 Tilt Capacitor Removal / Installation	4-15
4.17 Back Actuator Assembly Removal / Installation	4-16
4.18 Back Capacitor Removal / Installation	4-18
4.19 Arm Rest Adjustment	4-18
4.20 Foot Extension Brake Lever Adjustment	4-19
4.21 Hand Control Panel Or Interface Board Removal / Installation	4-19
4.22 Typical Foot Pedal Foot Switch Removal / Installation	4-20
4.23 Typical Foot Switch Removal / Installation	4-21
4.24 Foot Control Interface Board Removal / Installation	4-21
4.25 Plastic Foot Section Removal / Installation	4-22
4.26 Plastic Back Section Removal / Installation	4-23
4.27 Plastic Seat Section Removal / Installation	4-24
4.28 Base Up Limit Switch Removal / Installation / Adjustment	4-25
4.29 Foot Extension Removal / Installation	4-26
SECTION V SCHEMATICS AND DIAGRAMS	
5.1 Electrical Schematics / Wiring Diagrams	5-1
5.2 Audible Signal Guide Chart	5-9
SECTION VI PARTS LIST	
6.1 Introduction	6-1
6.2 Description of Columns	6-1
Pictorial Index	6-2.*
Upholstery Set (Standard)	6-3.*
Back Section Components	6-4.*
Seat Section Components	6-5
Actuator Assembly (Domestic)	6-6.*
Actuator Assembly (Canadian)	6-7.*
Foot Section Components	6-8
Upper Chair Electrical Components (Domestic)	6-9.*
Upper Chair Electrical Components (Canadian)	6-10.*
Lower Chair Electrical Components	6-11.*
Power Base Assembly	6-12.*
Base Sub-Assembly	6-13.*
Base Actuator Assembly	6-14.*
Foot Control Assembly	6-15.*
COMMENTS	7-1
FAX ORDERING FORM	7-2

(*) Indicates that there has been a serial number break for the illustration and that there are additional point page(s) following the original page.

Return To Table Of Contents

Return To Table Of Contents

IMPORTANT INSTRUCTIONS

General Safety Instructions

Safety First: The primary concern of Midmark Corporation is that this treatment chair is maintained with the safety of the patient and staff in mind. To assure that services and repairs are completed safely and correctly, proceed as follows:

(1) Read this entire manual before performing any services or repairs on this chair.

(2) Be sure you understand the instructions contained in this manual before attempting to service or repair this chair.

Warnings

Throughout this manual are Note, Caution, and Danger paragraphs that call attention to particular procedures. These items are used as follows:

NOTE
A note is used to amplify an operating procedure, practice or condition.

CAUTION
A CAUTION is used for an operating procedure, practice, or condition which, if not correctly followed, could result in equipment damage.

DANGER
A DANGER is used for an operating procedure, practice, or condition which, if not correctly followed, could result in loss of life or serious personal injury.

Warranty Instructions

Refer to the Midmark “Limited Warranty” printed on the back cover of the Installation and Operation Manual for warranty information. Failure to follow the guidelines listed below will void the warranty and/or render the 417 Power Podiatry Treatment Chair unsafe for operation.

- In the event of a malfunction, do not attempt to operate the chair until necessary repairs have been made.
- Do not attempt to disassemble chair, replace mal-functioning or damaged components, or perform adjustments unless you are one of Midmark’s authorized service technicians.
- Do not substitute parts of another manufacturer when replacing inoperative or damaged components. Use only Midmark replacement parts.

© Midmark 1994 SF-1399

SECTION I
GENERAL INFORMATION

1.1 Scope of Manual

This manual contains detailed troubleshooting, scheduled maintenance, maintenance, and service instructions for 417 Power Podiatry Treatment Chair. This manual is intended to be used by Midmark's authorized service technicians.

1.2 Description Of 417 Power Podiatry Treatment Chair

A. General Description (See Figure 1-1).

The 417 Power Podiatry Treatment Chair is an examination chair designed specifically for performing general podiatric examinations and minor podiatric procedures (Podiatry - treatment of foot ailments).

The major serviceable components of the chair are the arm casting linkage assembly, back actuator capacitor, back actuator assembly, tilt actuator capacitor, tilt actuator assembly, foot extension brake assembly, base capacitor, base actuator assembly, gas spring(s), base subassembly, base down limit switch, base up limit switch, PC control board, PC program board (a new style PC control board is now being used which combines the PC control board and PC program board together into one board), 0.5 amp fuse & 20 amp fuses for old style PC control board and 0.125 amp & 5 amp fuses for new style PC control board, control disable switch, foot control which includes foot switches and foot control interface board, and hand control which includes hand control panel and hand control interface board.

B. Theory of Operation (See Figures 5-1 thru 5-4 for electrical schematic / wiring diagram)

115 VAC is supplied directly to the PC control board and to the two electrical outlets.

Power:

The 115 VAC that is supplied to the PC control board is applied across two types of fuses; a 20 amp fuse and a 0.5 or 0.125 amp fuse (0.5 amp fuse is used on old style PC control board and 0.125 amp fuse is used on new style PC control board). 115 VAC is applied across a 20 amp fuse and supplies power to the contacts of the normally open actuator relays (there is one 20 amp fuse on the old style PC control board which protects all eight actuator relays. There are four 5 amp fuses on the new style PC control board; one for each actuator motor). This power is used to run an actuator assembly when its relay is energized. There are two relays per actuator assembly; one for each direction. There are two relays on the PC control board for a foot actuator assembly, which are not used by the 417 model. However, this PC control board is used by another model, the 414, which has a foot actuator assembly and uses the relays. 115 VAC is also applied across the 0.5 amp fuse or 0.125 amp fuse (0.5 amp fuse is used on old style PC control board and 0.125 amp fuse is used on new style PC control board) to the PC control board transformer. The transformer and some associated follow on circuitry reduce the 115 VAC to a +5 VDC output and a +12 VDC output. Both voltages are used to power circuitry on the PC control board and PC program board. On the new PC control board, there is a green "BOARD FAIL L.E.D.". If the L.E.D. is flashing, normal operation is being indicated. If the L.E.D. is not flashing, the PC control board is malfunctioning. Loss of power or blown fuses can also cause the green L.E.D. to not flash.

Actuators:

• On older units (before SN BP7668) both Back and Tilt actuators contain a pivot point on the end of the ball screw. If an actuator is run to the end of its stroke (mechanical home position), the ball screw shaft spins inside the nut, allowing the actuator to run without damaging or advancing the nut.
• On present units (after SN BP7668) both the Back and Tilt actuators have limit switches to prevent over-extending or retracting the actuator. Should the actuator reach the maximum extended or minimum retracted travel the specific limit switch contacts will Open, removing power from the actuator motor. This prevents the actuator from over-extending or over-retracting.
• All the actuator motors have a normally closed, thermal overload switch which will open if the actuator assembly is run continuously and overheats.
The actuator motor was not designed for continuous operation. The normal cool off period for the thermal overload switches is 10 - 20 minutes.

Normal Operation:

When a function switch is pressed on either the hand control or foot control, an interface board, located in the foot control or hand control, encodes the signal and sends it to the PC control board. The PC control board decodes the information and energizes the relay of the

Return To Table Of Contents

SECTION I
GENERAL INFORMATION

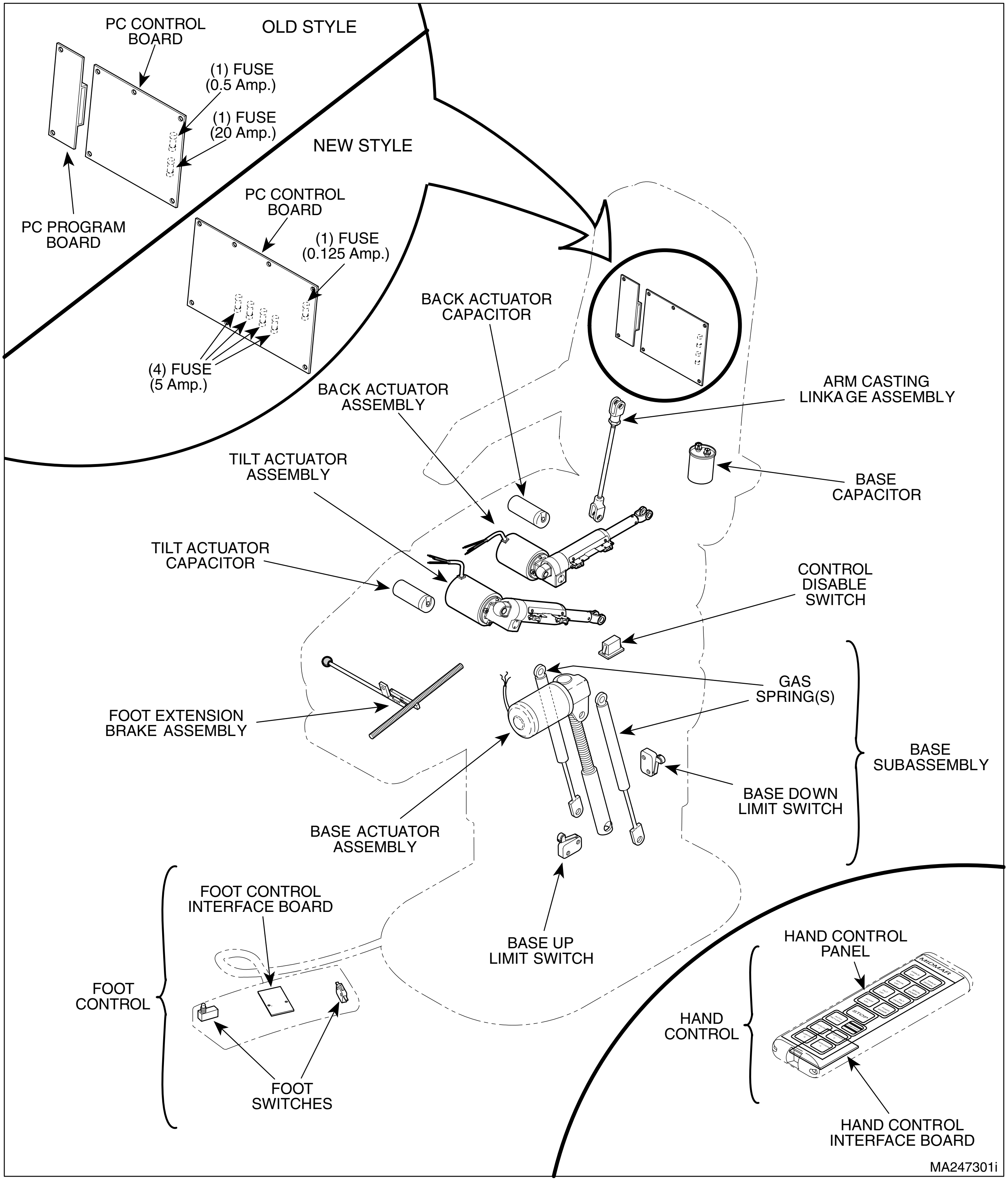

Figure 1-1. Major Components

selected function. The 115 VAC that is continuously supplied to the normally open (N.O.) contacts of the relay is now applied across the actuator assembly motor windings, causing the actuator assembly to run. There is a diagnostic L.E.D. in each relay circuit. When a relay coil is energized, an L.E.D. that is in the same circuit illuminates, indicating that there is power at the relay's coil and the PC control board is working properly.

When the PC control board receives a function signal from a hand control or foot control, the microprocessor on the PC control board does several things; it continuously monitors the current draw of the running actuator assembly motor (this is important because different patient loads affect the amount of current drawn by the motor as well as its speed - meaning monitoring current draw can let the PC control board calculate an actuator assembly's speed). The PC control board also keeps track of how long an actuator assembly's relay has been energized (how long actuator assembly motor has been running). By comparing the current draw of the running actuator motor and the time period that an actuator assembly's relay has been energized, against an on-board data base, the PC control board can determine how far, in its range of motion, an actuator assembly has traveled. The PC control board records this positional information in its memory. The PC control board continuously calculates an actuator assembly's position and stores that information in memory for future use. Also, if the current draw of an actuator assembly exceeds a predetermined level for more than 0.5 seconds, the PC control board shuts down the actuator assembly, until the footswitch/button is released and depressed again.

When an operator selects a function, the PC control board calculates the maximum run time that it will take the actuator assembly to reach the end of its travel range. If the operator holds down the function button longer than the maximum run time, the PC control board will deenergize the relay of the actuator assembly when the maximum run time is reached, causing the actuator assembly motor to stop running. This prevents excessive wear on an actuator assembly due to a switch sticking or an operator continuously holding down a function switch.

When a function (this is true for only for a few of the functions) is reselected, after its actuator assembly has been stopped by the PC control board because it reached its maximum run time, the PC control board will allow the actuator assembly to run for 2 seconds before deenergizing its relay. This allows the mechanical "home" position of the actuator assembly to be synchronized with the PC control board's software "home" position.

The TABLE UP and TABLE DOWN function works slightly different however; it uses a limit switch to stop the actuator assembly when it reaches its end of travel instead of letting the PC board stop it. This prevents wear of the base actuator assembly by not allowing it to freewheel. The base actuator assembly sees much heavier loads on it than do the other actuator assemblies. If the base actuator assembly were allowed to freewheel, the life of the actuator assembly would be greatly reduced. The base up and base down limit switch is a normally closed switch. When either limit switch is tripped, the circuit that provides power to the base actuator assembly for the up or down function is opened, causing the base actuator assembly to stop.

Programmed Positions:

The operator positions the chair into a position he/she would like to store into memory. When the PROGRAM button is pressed and held for 0.2 seconds for old style PC control board or 1 second for new style PC control board, the PC control board is in program mode and is ready to store a position into memory. Then, when one of the two program position buttons ("1" or "2") on the foot control or one of the four program position buttons ("1", "2", "3", or "4") on the hand control is pressed, the position of the chair is stored into the PC control board's memory. The operator has five seconds in which to select a programmed position button. After five seconds, the PC control board cancels the program mode. Also, if any buttons other than the program position buttons "1", "2", "3", or "4" are pressed, the program mode is canceled. The PC control board stores the chair's position which has been calculated and stored in the PC control boards memory as described in the "normal operation" of a function.

When an operator presses a programmed position button, the PC control board determines which functions need to move and energizes the relays for the actuator assemblies of those functions. The PC control board uses the method described in "normal operation" to determine when an actuator assembly of a function has reached its programmed position. When an actuator assembly of a function reaches its position, its relay is deenergized. This continues until all actuator assemblies of affected functions have reached their position.

If the operator wishes to stop the chair, for any reason, before all functions have reached their programmed position, the STOP button may be pressed. When the

SECTION I
GENERAL INFORMATION

STOP button is pressed, the PC control board immediately deenergizes all relays, causing the chair to stop. The STOP button overrides all other commands.

When a programmed position button is selected, it can be pressed and then released; it does not need to be held down. However, there is a selector switch; S1 on the old style PC control board and SW2-4 on new style PC control board, that can be switched to change this. Then the programmed position button must be pressed and held until the chair reaches its programmed position; if the button is released, the chair will stop moving. The switch (S1) works as follows: when the switch S1 is pushed in, the programmed position button can be pressed and released. When the switch S1 is pulled out, the programmed position button must be pressed and held. Switch SW2-4 works as follows: when switch is ON, programmed position buttons can be pressed and released. When switch SW2-4 is OFF, programmed position buttons must be pressed and held.

Auto Return Function Operation:

When the operator presses the AUTO RETURN button, the PC control board determines which functions need to move and energizes the relays for the actuator assemblies of those functions. The PC control board uses the method described in "normal operation" to determine when an actuator assembly of a function has reached the mechanical home position. When an actuator assembly of a function reaches its home position, its relay is deenergized. This continues until all actuator assemblies have reached their mechanical home position.

The PC control board adds a slight overrun time to each function during the AUTO RETURN mode to ensure all actuator assemblies reach their mechanical home position and freewheel. This allows the mechanical "home" position of the actuator assemblies to be synchronized with the PC control board's software "home" position, which is important if correct program positioning of chair is to be acheived.

If the operator wishes to stop the chair for any reason, before all functions have reached their programmed position, the STOP button may be pressed. When the STOP button is pressed, the PC control board immediately deenergizes all relays, causing the chair to stop. The STOP button overrides all other commands.

Re-initialization:

If a PC control board loses power for approximately 3 days or longer or if the chair is new, the chair must be re-initialized. If the chair does not move to correct programmed positions even after an AUTO RETURN has been initiated, the PC control board probably needs re-initialized. To re-initialize the PC control board, either the PROGRAM, TABLE UP, and TABLE DOWN buttons ***or*** PROGRAM, POSITION "1", and POSITION "2" buttons must be pressed and held for at least 2 seconds (which buttons must be pressed depend on which type of foot control the chair has. On a chair with a hand control, either group of buttons may be used). This clears all position memory from the PC control board, except for programmed positions. The PC control board makes all buttons inactive, except for the AUTO RETURN button and STOP button. The AUTO RETURN button should now be pressed which will cause the chair to run each actuator assembly to its mechanical home position. The reinitialization procedure must be fully completed before normal operation of the chair can be resumed.

Audible Alert Tones: (See Table 5-1)

The new style PC control board has audible tones to provide feedback to the operator. SW2-1 controls whether the tones are activated or deactivated; if SW2-1 is ON, tones are activated. If SW2-1 is OFF, tones are deactivated.

General Information:

A capacitor is in each actuator assembly circuit. The capacitor provides start up power and run power for the actuator motor.

The PC control board constantly monitors the control disable switch for +12 VDC. If 0.0 VDC is detected (the control disable switch is ON, meaning the chair is disabled), the PC control board disables the relays of all functions and removes power from the foot control or hand control. If +12 VDC is detected (the control disable switch is OFF, meaning the chair is enabled), the PC control board operates normally. The control disable switch is located under the left electrical outlet. This function allows the controls to be disabled, preventing unauthorized personnel from operating the chair, such as a patient.

The maximum number of buttons that can be pressed at one time is three; if any more than three buttons are pressed at one time, the PC control board forces the STOP function to be executed.

There is either a capacitor / battery on the old style PC control board that provides power to retain the board's memory. The PC control board will retain its memory for approximately 3 days. On new style PC control boards, there is an EEPROM chip which retains the board's memory indefinitely.

Return To Table Of Contents

1.3 SPECIFICATIONS

Factual data for the 417 Power Podiatry Treatment Chair is provided in Table 1-1.

Table 1-1. Specifications

Description	Data
Weight:	
Without Shipping Carton	525 lb (238.1 kg)
With Shipping Carton	575 lb (260.8 kg)
Shipping Carton	76 in. "L" x 35 in. "W" x 36 in. "H" (193 cm x 88.9 cm x 91.4 cm)
Dimensions:	
Table Top Length	70 in. (177.8 cm)
Table Top Length with foot section fully extended	78 11/16 in. (199.9 cm)
Table Top Width (including arms)	28 1/8 in. (71.4 cm)
Chair Positioning (Adjustable):	
Table Top Height	22.5 in. to 41 in. (57.2 cm to 104.1 cm)
Back Down to Back Up	16° - 83°
Tilt Down to Tilt Up	0° - 30°
Chair Speed:	
Table Down to Table Up	15 seconds
Back Down to Back Up	8 seconds
Tilt Down to Tilt Up	8 seconds
Debris Tray	Extends 8 3/4 in (22.2 cm) beyond foot section
Minimum Height at foot section w/o tilt	19.5 in. (49.5 cm)
Maximum Height at foot section w/o tilt	38.5 in. (97.8 cm)
Maximum Height at foot section with maximum tilt	56 1/4 in. (142.9 cm)
Maximum Height at foot section with maximum tilt and maximum lift	55 1/4 in. (140.3 cm)
Maximum Height at foot section with maximum tilt, maximum lift, and foot section fully extended	58 in. (147.3 cm)
Weight Capacity (Normal Operation)	300 lb (136 kg)
Weight Capacity (Overweight Operation)	350 lb (159 kg)
Electrical Requirements:	
115 VAC Unit	110 - 120 VAC, 60 HZ, 15 amp, single phase
Power Consumption:	
115 VAC Unit	1440 WATTS, 12 amps @ 120 VAC
Recommended Circuit:	A separate (dedicated) circuit is recommended for this chair. The chair *should not* be connected to an electrical circuit with other appliances or equipment unless the circuit is rated for the additional load.

1.4 Parts Replacement Ordering

If a part replacement is required, order the part directly from the factory as follows:

(1) Refer to Figure 1-2 to determine the location of the model number and serial number of the chair and record this data.

(2) Refer to the Parts List to determine the item numbers of the parts, part numbers of the parts, descriptions of the parts, and quantities of parts needed and record this data (Refer to para 6.1).

> **NOTE**
> Ask the Purchasing Department of the company that owns the chair for this information. Otherwise, this information may be obtained from the dealer that sold the chair.

(3) Determine the installation date of the chair and record this data.

(4) Call Midmark with the recorded information and ask for the Medical Products Technical Services Department. See back cover of this manual for the phone number or use the Fax Order Form (See page 7-2 for Fax Order Form).

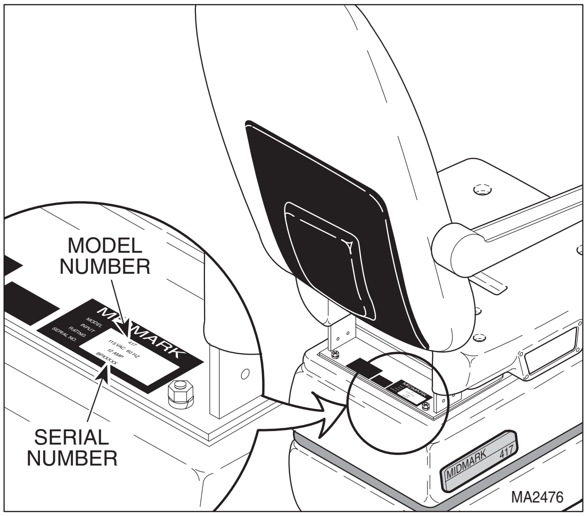

Figure 1-2. Model Number / Serial Number Location

1.5 Special Tools

Table 1-2 lists all of the special tools needed to repair the chair, how to obtain the special tools, and the purpose of each special tool.

Table 1-2. Special Tool List

Description of Special Tool	Manufacturer's Name / Address / Phone	Manufacturer's Part Number	Purpose of Special Tool
Multimeter	Commercially Available	Any Type	Used to perform continuity and voltage checks.
Torque Wrench	Commercially Available	Any Type	Used to tighten hardware to specified torque values.

Return To Table Of Contents

SECTION II
TESTING AND TROUBLESHOOTING

2.1 Operational Test (See Figure 2-1)

In order to effectively diagnose the malfunction of the chair, it may be necessary to perform an operational test as follows:

> **DANGER**
> **Refer to the Operator Manual for complete instructions on operating the chair. Failure to do so could result in personal injury.**

> **NOTE**
> The Operational Test, for the most part, only describes what should happen when the chair is operated. If the chair does something other than described, a problem has been discovered. Refer to the Troubleshooting Guide to determine the cause of the problem and its correction.

(1) Plug the chair into a grounded, non-isolated, correctly polarized outlet that has the proper voltage output for the chair.

> **NOTE**
> To disable the chair, the control disable switch must be thrown toward foot end of chair.

(2) Switch the CONTROL DISABLE switch to the disable position (See Figure 2-1).

(3) Depress TABLE UP, TABLE DOWN, BACK UP, BACK DOWN, TILT UP, and TILT DOWN pedals on foot control.

(4) Observe. No functions should operate.

> **NOTE**
> To enable the chair, the control disable switch must be thrown toward head end of chair.

(5) Switch the CONTROL DISABLE switch to enable position.

(6) Depress TABLE UP, TABLE DOWN, BACK UP, BACK DOWN, TILT UP, and TILT DOWN pedals on foot control and run each function to its limit.

(7) Observe. The table top should move in the direction corresponding to the pedal which is being depressed. Each function should have the following range of motion:
TABLE UP to TABLE DOWN - 22.5 in. to 41 in. (57.2 cm to 106.7 cm)
TILT DOWN to TILT UP - 0° to 30°
BACK DOWN to BACK UP - 16° to -83°

Function speeds should be as follows:
TABLE DOWN to TABLE UP - 15 seconds
BACK DOWN to BACK UP - 8 seconds
TILT DOWN to TILT UP - 8 seconds.

When an actuator assembly reaches its limit, the PC control board should automatically stop the function from freewheeling after a short time. The arm rests should be parallel with the seat section of the table top when the back section is all the way up.

(8) Place approximately 300 lbs (136 kg) on seat section of table top. Run TABLE UP and TABLE DOWN functions all the way up and all the way down.

(9) Observe. The base actuator assembly should be able to raise and lower normally with the 300 lb (136 kg) load. The base actuator assemby should not squeal or make excessive noise when it freewheels at the end of its stroke.

(10) Remove the 300 lb (136 kg) weight.

(11) Raise TABLE UP function all the way up.

(12) Depress the AUTO RETURN foot switch. After the table top lowers halfway, depress the STOP foot switch.

(13) Observe. When the AUTO RETURN foot switch is depressed, the table top should begin to lower. When the STOP foot switch is depressed, the table top should stop lowering.

(14) Depress the AUTO RETURN foot switch and allow the table top to lower completely.

© Midmark Corporation 1994 SF-1399

Return To Table Of Contents

SECTION II
TESTING AND TROUBLESHOOTING

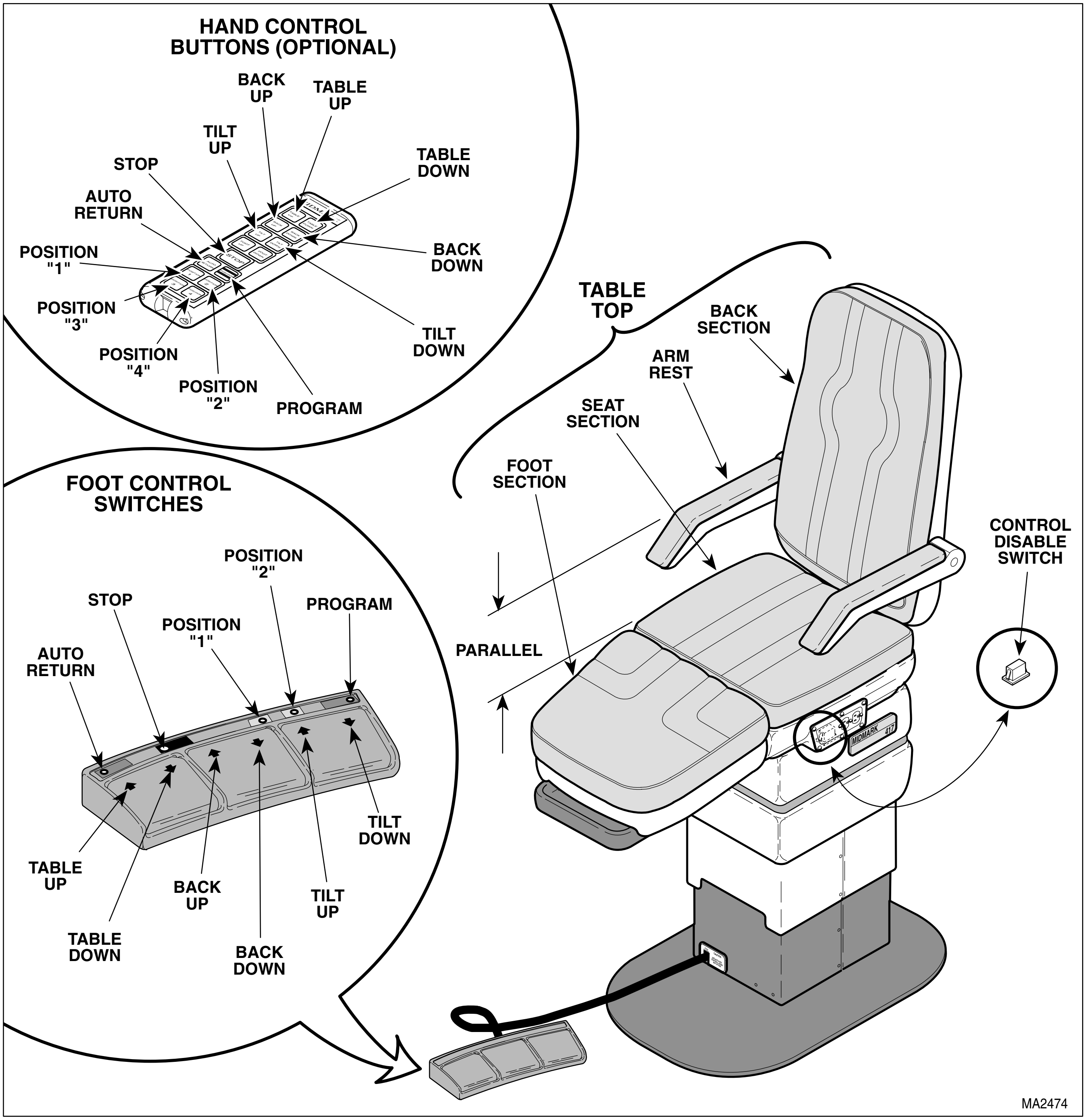

Figure 2-1. Operational Test

(15) Observe. When the table top is completely lowered, the base actuator assembly should stop running (before the base actuator assembly is allowed to freewheel), indicating that the base down limit switch has been tripped.

NOTE
A hand control is an optional accessory; not all units have one.

(16) If chair has a hand control, repeat steps 6, 7, and 11 thru 15 using the buttons on the hand control.

(17) Depress the PROGRAM foot switch on foot control - one second for new style board and 0.2 seconds for old style board.

NOTE
A program position foot switch must be depressed within 5 seconds of depressing the PROGRAM foot switch.

(18) Depress the POSITION "1" foot switch.

(19) Use any of the single function foot pedals to move the table top to a new position.

(20) Depress the POSITION "1" foot switch.

(21) Observe. The table top should move back to the position programmed in steps 17 and 18.

NOTE
A hand control is an optional accessory; not all units have one.

(22) If chair has a hand control, repeat steps 17 thru 21 using the PROGRAM button and POSITION "1", "2", "3", and "4" buttons on the hand control instead of foot control.

2.2 Troubleshooting Procedures

Table 2-1 is a Troubleshooting Guide which is used to determine the cause of the malfunction.

Table 2-1. Troubleshooting Guide

Problem	Symptom	Probable Cause	Check	Correction
Chair will not operate when any of the six up and down functions, program function, or auto return function are selected.	When a foot switch or hand control button is depressed, its actuator does not run or hum.	Power cord is not plugged into facility wall outlet.	Check to see if power cord is plugged in.	Plug power cord into facility wall outlet and/or connector receptacle on chair.
		Control disable switch in turned to "OFF" position.	Check to see if control disable switch is in the "OFF" position (located on bottom side of one of the chair's two electrical outlets).	Switch the control disable switch to "ON" position.
		Control disable switch is malfunctioning.	Perform a continuity check on the control disable switch.	Replace the control disable switch. Refer to para 4.6.
		Facility circuit breaker providing power to chair is tripped.	Check to see if facility circuit breaker is tripped. One way of checking this is to plug a lamp into wall outlet that chair was plugged into.	If circuit breaker is tripped, determine what caused circuit breaker to trip, correct the problem, and then reset/replace circuit breaker.
		Wire connections loose.	Check all wiring connections from power cord to connector J1 on the PC control board. Perform continuity check on wires. Use multimeter to check for proper voltage levels.	Clean any dirty connections. Tighten any loose connections. Replace any damaged connections.

Return To Table Of Contents

Table 2-1. Troubleshooting Guide - Continued

Problem	Symptom	Probable Cause	Check	Correction
Chair will not operate when any of the six up and down functions, program function, or auto return function are selected - Continued.	When a foot switch or hand control button is depressed, its actuator does not run or hum - Continued.	0.5 amp fuse or 20 amp fuse on old style PC control board or 0.125 amp fuse on new style PC control board is blown.	Refer to Figure 2-2 for this check. Perform continuity check on fuses.	Replace any blown fuses.
		The supply voltage for PC control board is below normal limits.	Check facility power source for voltage between 110 - 120 VAC.	If voltage is below 110 VAC, correct low voltage problem of facility power source.
		PC control board is locked up and needs to be reinitialized.	—	Reinitialize the PC control board. Refer to para 4.2.
		PC control board is malfunctioning.	Replace suspect PC control board with known working PC control board. On new style PC control boards, check if green Board Fail L.E.D. is flashing. Flashing indicates normal operation, while not flashing indicates a malfunction.	Replace PC control board. Refer to para 4.8.
		Hand control, foot control, or coil cord malfunctioning.	Replace suspect component with known working component.	Replace malfunctioning component.
No actions can be initiated from foot control.	Chair has power, but no functions can be initiated from foot control (hand control functions properly).	Coil cord is not plugged into foot control or receptacle on chair properly.	Check if coil cord is plugged in properly.	Plug coil cord into foot control or receptacle on chair. Clean any dirty connections.
		Coil cord receptacle on chair is malfunctioning.	Plug foot control into receptacle on other side of chair and then attempt to operate chair. If works now, receptacle was malfunctioning.	Replace receptacle.
		Coil cord receptacle (is part of foot control interface board) on foot control is malfunctioning.	Replace suspect foot control interface board with known working foot control interface board.	Replace foot control interface board. Refer to para 4.24.
		Coil cord is malfunctioning.	Use a multimeter to perform a continuity check on the coil cord.	Replace coil cord.
No actions can be initiated from hand control.	Chair has power, but no functions can be initiated from hand control (foot control functions properly).	Coil cord is not plugged into hand control or receptacle on chair properly.	Check if coil cord is plugged in properly.	Plug coil cord into hand control or receptacle on chair. Clean any dirty connections.
		Ribbon connector from hand control panel has become disconnected from the control interface board.	Check if ribbon connector is connected to the control interface board properly.	Connect ribbon connector of hand control panel to control interface board. Refer to para 4.21.
		Coil cord receptacle on chair is malfunctioning.	Plug hand control into receptacle on other side of chair and then attempt to operate chair. If works now, receptacle was malfunctioning.	Replace receptacle.
		Coil cord receptacle (is part of control interface board) on hand control is malfunctioning.	Replace suspect control interface board with known working control interface board.	Replace control interface board. Refer to para 4.21.

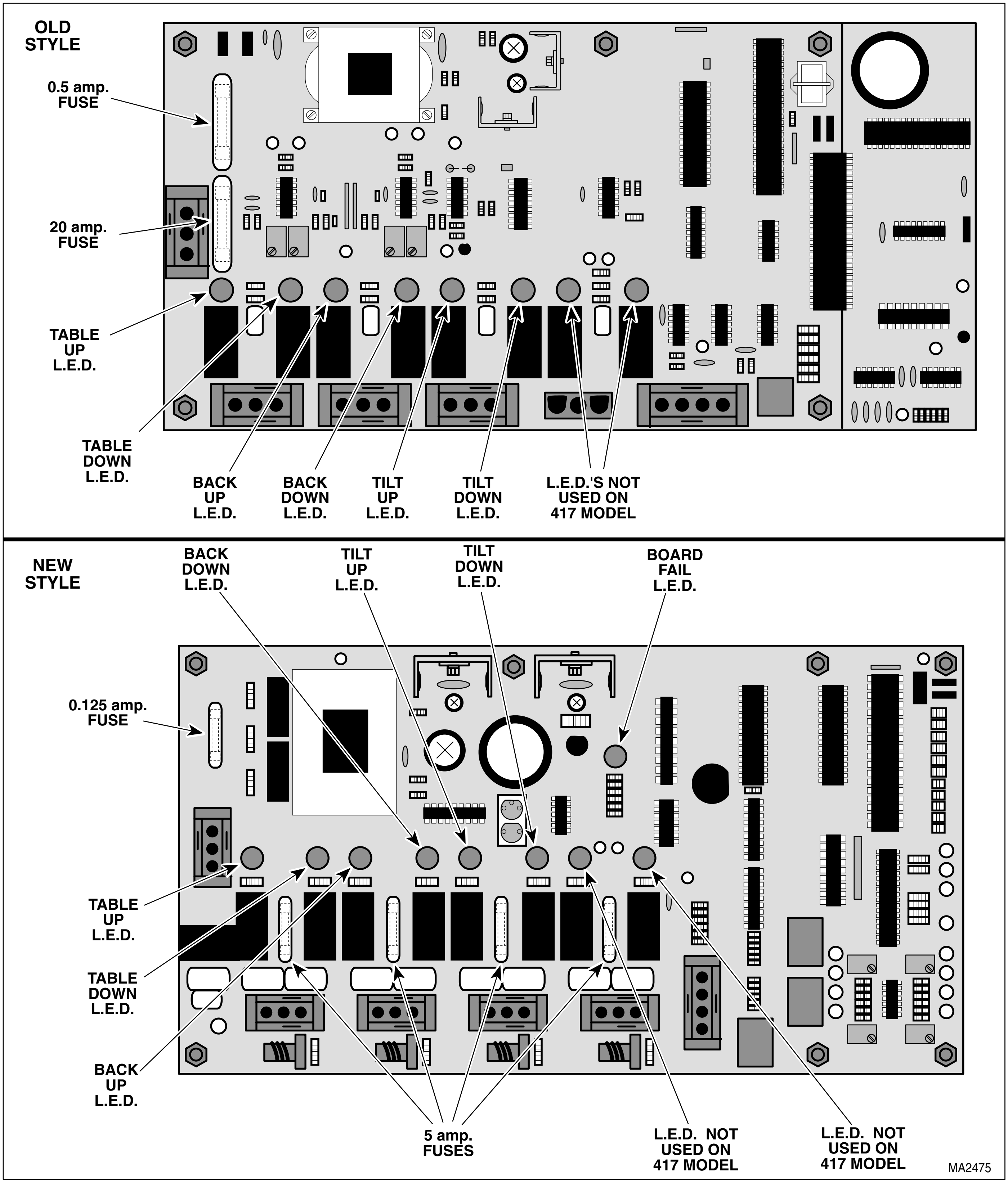

Figure 2-2. Indicator L.E.D.'s For Use With Troubleshooting Guide

Return To Table Of Contents

Table 2-1. Troubleshooting Guide - Continued

Problem	Symptom	Probable Cause	Check	Correction
No actions can be initiated from hand control - Continued.	Chair has power, but no functions can be initiated from hand control (foot control functions properly) - Continued.	Coil cord is malfunctioning.	Use a multimeter to perform a continuity check on the coil cord.	Replace coil cord.
		Hand control is malfunctioning.	Replace suspect control interface board with known working control interface board.	Replace control interface board. Refer to para 4.21.
			Replace suspect hand control panel with known working hand control panel.	Replace hand control panel. Refer to para 4.21.
		Reinitialization routine was not fully completed.	—	Run another reinitialization procedure. If it doesn't work, unplug all actuator wire harnesses from PC board and run a third initialization procedure. Refer to para 4.2.
One or more functions cannot be initiated from foot control or hand control.	Some functions may be initiated with foot control or hand control, but some may not.	Hand control panel of hand control is malfunctioning (switch membrane is malfunctioning).	Replace suspect hand control panel with known working hand control panel.	Replace hand control panel. Refer to para 4.21.
		A push-button switch in foot control is malfunctioning.	Perform continuity check on push-button switch or replace push-button switch with a known working switch.	Replace push-button switch. Refer to para 4.22 or 4.23.
		Wire connections loose in foot control.	Check all wiring connections from the push-button switch to the control interface board.	Clean any dirty connections. Tighten any loose connections. Replace any damaged connections.
TABLE UP and TABLE DOWN functions do not work.	When TABLE UP and TABLE DOWN buttons are pressed, the chair will not move (all other functions work).	Base capacitor is weak or blown.	Replace suspect base capacitor with known working base capacitor.	Replace base capacitor. Refer to para 4.14.
		Thermal overload switch in base actuator assembly is activated.	—	Wait 10 to 20 minutes to allow base actuator assembly to cool.
		Base actuator assembly is malfunctioning.	Replace suspect base actuator assembly or actuator motor with a known working assembly.	Replace actuator motor or base actuator assembly. Refer to para 4.11 or 4.12.
		5 amp fuse for TABLE UP and TABLE DOWN functions is blown (applies to new style PC board only).	Refer to Figure 2-2 for this check. Perform continuity check on fuse.	Replace blown fuse.
		Wire connections loose.	Check all wiring connections to base actuator assembly.	Clean any dirty connections. Tighten any loose connections. Replace any damaged connections.
		Gas spring(s) are malfunctioning.	Replace suspect gas spring(s) with known working gas spring(s).	Replace gas spring(s). Refer to para 4.13.
		Base actuator is drawing excessive current for more than 0.5 seconds.	Release all buttons. Then, run base actuator again to see if it stops running again.	If problem repeats, replace base capacitor, actuator motor, or actuator. Refer to para 4.14, 4.11, or 4.12.

Table 2-1. Troubleshooting Guide - Continued

Problem	Symptom	Probable Cause	Check	Correction
TABLE UP and TABLE DOWN functions do not work - Continued.	When TABLE UP and TABLE DOWN buttons are pressed, the chair will not move (all other functions work) - Continued.	PC control board is malfunctioning.	Refer to Figure 2-2 for this check. Press TABLE UP and then the TABLE DOWN button while observing the PC control board. The TABLE UP L.E.D. should illuminate when the TABLE UP button is pressed and TABLE DOWN L.E.D. should illuminate when the TABLE DOWN button is pressed. If not, PC control board is malfunctioning.	Replace PC control board. Refer to para 4.8.
BACK UP and BACK DOWN functions do not work.	When BACK UP and BACK DOWN buttons are pressed, the chair will not move (all other functions work).	Back capacitor is weak or blown.	Replace suspect back capacitor with known working back capacitor.	Replace back capacitor. Refer to para 4.18.
		Thermal overload switch in back actuator assembly is activated.	—	Wait 10 to 20 minutes to allow back actuator assembly to cool.
		Back actuator assembly is malfunctioning.	Replace suspect back actuator assembly or actuator motor with a known working assembly.	Replace actuator motor or back actuator assembly. Refer to para 4.11 or 4.17.
		5 amp fuse for BACK UP and BACK DOWN functions is blown (applies to new style PC board only).	Refer to Figure 2-2 for this check. Perform continuity check on fuse.	Replace blown fuse.
		Wire connections loose.	Check all wiring connections to back actuator assembly.	Clean any dirty connections. Tighten any loose connections. Replace any damaged connections.
		Back actuator is drawing excessive current for more than 0.5 seconds.	Release all buttons. Then, run back actuator again to see if it stops running again.	If problem repeats, replace back capacitor, actuator motor, or actuator. Refer to para 4.18, 4.11, or 4.17.
		PC control board is malfunctioning.	Refer to Figure 2-2 for this check. Press BACK UP and then the BACK DOWN button while observing the PC control board. The BACK UP L.E.D. should illuminate when the BACK UP button is pressed and the BACK DOWN L.E.D. should illuminate when the BACK DOWN button is pressed. If not, PC control board is malfunctioning.	Replace PC control board. Refer to para 4.8.
TILT UP and TILT DOWN functions do not work.	When TILT UP and TILT DOWN buttons are pressed, the chair will not move (all other functions work).	Tilt capacitor is weak or blown.	Replace suspect tilt capacitor with known working tilt capacitor.	Replace tilt capacitor. Refer to para 4.16.
		Thermal overload switch in tilt actuator assembly is activated.	—	Wait 10 to 20 minutes to allow tilt actuator assembly to cool.
		Tilt actuator assembly is malfunctioning.	Replace suspect tilt actuator assembly or actuator motor with a known working assy.	Replace actuator motor or tilt actuator assembly. Refer to para 4.11 or 4.15.

© Midmark Corporation 1994 SF-1399 Rev. 1/97 Printed in U.S.A.

SECTION II
TESTING AND TROUBLESHOOTING

Table 2-1. Troubleshooting Guide - Continued

Problem	Symptom	Probable Cause	Check	Correction
TILT UP and TILT DOWN functions do not work - Continued.	When TILT UP and TILT DOWN buttons are pressed, the chair will not move (all other functions work) - Continued.	5 amp fuse for TILT UP and TILT DOWN functions is blown (applies to new style PC board only).	Refer to Figure 2-2 for this check. Perform continuity check on fuse.	Replace blown fuse.
		Wire connections loose.	Check all wiring connections to tilt actuator assembly.	Clean any dirty connections. Tighten any loose connections. Replace any damaged connections.
		Tilt actuator is drawing excessive current for more than 0.5 seconds.	Release all buttons. Then, run tilt actuator again to see if it stops running again.	If problem repeats, replace tilt capacitor, actuator motor, or actuator. Refer to para 4.16, 4.11, or 4.15.
		PC control board is malfunctioning.	Refer to Figure 2-2 for this check. Press TILT UP and then the TILT DOWN button while observing PC control board. The TILT UP L.E.D. should illuminate when TILT UP button is pressed and TILT DOWN L.E.D. should illuminate when the TILT DOWN button is pressed. If not, the PC control board is malfunctioning.	Replace PC control board. Refer to para 4.8.
TABLE UP function works, but TABLE DOWN function does not or TABLE DOWN function works, but TABLE UP function does not. All other functions work.	One function runs properly, but the other does not.	Wire connections loose.	Check all wiring connections to base actuator assembly.	Clean any dirty connections. Tighten any loose connections. Replace any damaged connections.
		Gas spring(s) are malfunctioning (especially for TABLE UP function).	Replace suspect gas spring(s) with known working gas spring(s).	Replace gas spring(s). Refer to para 4.13.
		PC control board is malfunctioning.	Refer to Figure 2-2 for this check. Press TABLE UP and then the TABLE DOWN button while observing the PC control board. The TABLE UP L.E.D. should illuminate when the TABLE UP button is pressed and the TABLE DOWN L.E.D. should illuminate when the TABLE DOWN button is pressed. If not, PC control board is malfunctioning.	Replace PC control board. Refer to para 4.8.
		TABLE UP or TABLE DOWN foot switch is malfunctioning.	Perform a continuity check on suspect foot switch.	Replace foot switch. Refer to para 4.22.
		Hand control panel of hand control is malfunctioning (switch membrane is malfunctioning).	Replace suspect hand control panel with known working hand control panel.	Replace hand control panel. Refer to para 4.21.

© Midmark Corporation 1994 SF-1399 Rev. 1/97

Printed in U.S.A.

Return To Table Of Contents

Table 2-1. Troubleshooting Guide - Continued

Problem	Symptom	Probable Cause	Check	Correction
TABLE UP function works properly, but TABLE DOWN function does not.	Actuator motor does not hum when function is selected.	Base down limit switch is malfunctioning - stuck open.	Perform continuity check on base down limit switch. Should be continuity when switch is not tripped.	Replace base down limit switch. Refer to para 4.10.
TABLE DOWN function works properly, but TABLE UP function does not.	Actuator motor does not hum when function is selected.	Base up limit switch is malfunctioning - stuck open.	Perform continuity check on base up limit switch. Should be continuity when switch is not tripped.	Replace base up limit switch. Refer to para 4.28.
	TABLE DOWN works properly, but TABLE UP function will not raise or raises slowly (moves fine for light patient, but will not move or moves slowly for very heavy patient).	Gas spring(s) are malfunctioning.	Replace suspect gas spring(s) with known working gas spring(s).	Replace gas spring(s). Refer to para 4.13.
BACK UP function works, but BACK DOWN function does not or BACK DOWN function works, but BACK UP function does not. All other functions work.	One function runs properly, but the other does not.	Wire connections loose.	Check all wiring connections to base actuator assembly.	Clean any dirty connections. Tighten any loose connections. Replace any damaged connections.
		Back Down or Up Limit Switch, Normally Closed contacts, are open or wire disconnected.	Check condition of Back Down or Up Limit Switch contacts and connections.	Repair or replace Back Down or Up Limit Switch. Refer to para 4.
		PC control board is malfunctioning.	Refer to Figure 2-2 for this check. Press BACK UP and then the BACK DOWN button while observing the PC control board. The BACK UP L.E.D. should illuminate when the BACK UP button is pressed and the BACK DOWN L.E.D. should illuminate when the BACK DOWN button is pressed. If not, PC control board is malfunctioning.	Replace PC control board. Refer to para 4.8.
		BACK UP or BACK DOWN foot switch is malfunctioning.	Perform a continuity check on suspect foot switch.	Replace foot switch. Refer to para 4.22.
		Hand control panel of hand control is malfunctioning (switch membrane is malfunctioning).	Replace suspect hand control panel with known working hand control panel.	Replace hand control panel. Refer to para 4.21.
TILT UP function works, but TILT DOWN function does not or TILT DOWN function works, but TILT UP function does not. All other functions work.	One function runs properly, but the other does not.	Wire connections loose.	Check all wiring connections to base actuator assembly.	Clean any dirty connections. Tighten any loose connections. Replace any damaged connections.
		Tilt Down or Up Limit Switch Normally Closed contacts are open or wire disconnected.	Check condition of Tilt Down or Up Limit Switch contacts and connections.	Repair or replace Tilt Down or Up Limit Switch. Refer to para 4.

SECTION II
TESTING AND TROUBLESHOOTING

Table 2-1. Troubleshooting Guide - Continued

Problem	Symptom	Probable Cause	Check	Correction
TILT UP function works, but TILT DOWN does not, or TILT DOWN works but TILT UP does not. Continued.	One function runs properly but the other does not.	PC control board is malfunctioning.	Refer to Figure 2-2 for this check. Press TILT UP and then the TILT DOWN button while observing the PC control board. The TILT UP L.E.D. should illuminate when TILT UP is depressed and TILT DOWN L.E.D. should illuminate when TILT DOWN is depressed. If not, PC control board is malfunctioning.	Replace PC control board. Refer to para 4.8.
AUTO RETURN function does not operate properly.	Nothing happens when the AUTO RETURN button is depressed.	PC control board is malfunctioning.	Replace suspect PC control board with known working PC control board.	Replace PC control board. Refer to para 4.8.
		PC control board needs reinitialized.	—	Reinitialize the PC control board. Refer to para 4.2.
		Base down limit switch is tripped.	Chair is already lowered all the way down, tripping limit switch or base down limit switch is out of adjustment, causing base down limit switch to remain tripped or to trip earlier than desired.	Adjust base down limit switch. Refer to para 4.10.
		Base down limit switch is malfunctioning - stuck open.	Perform continuity check on base down limit swithc (limit switch is N.O. when not tripped).	Replace base down limit switch. Refer to para 4.10.
		AUTO RETURN foot switch is malfunctioning.	Perform a continuity check on suspect foot switch.	Replace foot switch. Refer to para 4.23.
		Hand control panel of hand control is malfunctioning (switch membrane is malfunctioning).	Replace suspect hand control panel with known working hand control panel.	Replace hand control panel. Refer to para 4.21.
	When AUTO RETURN button is pressed, TABLE DOWN function does not stop automatically when it reaches its lowest point.	PC control board needs reinitialized.	—	Reinitialize the PC control board. Refer to para 4.2.
		Base down limit switch is tripped (does not apply to older chairs which do not have a limit switch).	Chair is already lowered all the way down, tripping limit switch or base down limit switch is out of adjustment, causing base down limit switch to remain tripped or to trip earlier than desired.	Adjust base down limit switch. Refer to para 4.10.
		Base down limit switch is malfunctioning - stuck open (does not apply to older chairs which do not have a limit switch).	Perform continuity check on base down limit swithc (limit switch is N.O. when not tripped).	Replace base down limit switch. Refer to para 4.10.

Return To Table Of Contents

Table 2-1. Troubleshooting Guide - Continued

Problem	Symptom	Probable Cause	Check	Correction
The chair's PROGRAM function does not work properly.	The PC program board / PC control board does not hold a programmed position.	Incorrect steps taken for entry of position.	Refer to the operator's manual for proper procedure.	Refer to the operator's manual for proper procedure.
		PC program board is not fully seated into PC control board (on units with old style boards only).	Check to see if PC program board is loose.	Seat PC program board fully into PC control board. Refer to para 4.8.
		Chair has been unplugged or without power for more than three days.	—	Reinitialize the PC control board. Refer to para 4.2.
		PC control board needs reinitialized.	—	Reinitialize the PC control board. Refer to para 4.2.
		PROGRAM button or POSITION "1" or "2" foot switch is malfunctioning.	Perform a continuity check on suspect foot switch.	Replace foot switch. Refer to para 4.23.
		Hand control panel of hand control is malfunctioning (switch membrane is malfunctioning).	Replace suspect hand control panel with known working hand control panel.	Replace hand control panel. Refer to para 4.21.
		PC program board / PC control board is malfunctioning.	—	Replace PC program board / PC control board. Refer to para 4.8.
	Chair does not move to its correct programmed position when POSITION "1", "2", "3", or "4" button is pressed.	PC program board is not fully seated into PC control board (applies to units with old style PC control board only).	Check to see if PC program board is loose.	Seat PC program board fully into PC control board.
		Chair has been unplugged or without power for more than three days.	—	Reinitialize the PC control board. Refer to para 4.2.
		PC control board needs reinitialized.	—	Reinitialize the PC control board. Refer to para 4.2.
		PROGRAM button or POSITION "1" or "2" foot switch is malfunctioning.	Perform a continuity check on suspect foot switch.	Replace foot switch. Refer to para 4.23.
		Hand control panel of hand control is malfunctioning (switch membrane is malfunctioning).	Replace suspect hand control panel with known working hand control panel.	Replace hand control panel. Refer to para 4.21.
		PC program board / PC control board is malfunctioning.	—	Replace PC program board / PC control board. Refer to para 4.8.

Return To Table Of Contents

Table 2-1. Troubleshooting Guide - Continued

Problem	Symptom	Probable Cause	Check	Correction
The chair's PROGRAM function does not work properly - Continued.	Chair will not move to its programmed position unless the programmed POSITION button is held down for the entire move; if the button is released during move, the chair stops.	On old style PC control boards, selector switch S1, located on the PC control board, is pulled out (When S1 switch is in pulled out position, the programmed POSITION switch must be pressed and held). On new style PC control boards, selector switch SW2-4, located on the PC control board, is in OFF position (When switch is in OFF position, the programmed POSITION switch must be pressed and held).	Check if Switch S1, on old style PC control board, is in pulled out position or if switch SW2-4 on new style PC control board is in OFF position.	Push switch S1 all the way in or move switch SW2-4 to ON position (this will allow programmed POSITION button to be pressed and released instead of pressed and held).
Chair moves fine for light patient, but will not move or moves slowly for very heavy patient.	Occurs for both the up and the down functions.	Low voltage is being supplied to chair.	Check voltage at wall receptacle. Should be 115 VAC ± 5 VAC.	Correct low voltage situation at wall receptacle.
		Chair overloaded with too heavy of a patient.	Maximum weight capacity for chair is 350 lbs. Check if patient exceeded this weight.	Inform chair operator of weight limitation of chair.
		Capacitor for function is weak.	Replace suspect capacitor with known working capacitor.	Replace capacitor for the weak function. Refer to para 4.14, 4.16, or 4.18.
A chair function will only run for a short time.	After a 1/2 second run time, the selected function stops running.	Overcurrent draw is being detected by PC control board.	—	Replace actuator motor or capacitor.
		The 110V / 220 V selector switch on the PC control board is set to the 220 Volt setting.	Check to see if the 110V / 220 V selector switch on the PC control board is set to the 220 Volt setting.	Switch the 110V / 220 V selector switch on the PC control board to the 110 Volt setting.
Any of the three functions drift by themselves.	Chair functions properly otherwise.	Motor actuator brake is malfunctioning for that function.	Replace suspect actuator brake in the motor actuator with known working actuator brake.	Replace actuator brake. Refer to para 4.11.
Whirling or squeaking noise is heard when an actuator is being run.	Noisy actuator.	Foreign matter on ball screw threads and lack of lubricant.	Check for foreign matter on ball screw threads. Check for lack of lubricant on ball screw threads.	Clean all foreign matter off of ball screw threads. Coat ball screw threads with STP treatment oil or equivalent.

Return To Table Of Contents

SECTION III
SCHEDULED MAINTENANCE

3.1 Scheduled Maintenance

Table 3-1 is a Scheduled Maintenance Chart which lists the inspections and services that should be performed periodically on the chair. These inspections and services should be performed as often as indicated in the chart.

Table 3-1. Scheduled Maintenance Chart

Interval	Inspection or Service	What to Do
Semi-annually	Obvious damage	Visually check condition of chair for obvious damage such as: cracks in components, missing components, dents in components, or any other visible damage which would cause chair to be unsafe to operate or would compromise its performance. Repair chair as necessary.
	Fasteners/hardware	Check chair for missing or loose fasteners/hardware. Replace any missing hardware and tighten any loose hardware as necessary.
	Warning and instructional decals	Check for missing or illegible decals. Replace decals as necessary.
	Pivot points/moving parts/accessories	Lubricate all exposed pivot points, moving parts, and accessories with silicone based lubricant.
	Foot control	Check that foot control works correctly. Make sure all foot switches operate properly.
	Hand Control (optional)	Check that hand control works correctly. Make sure all switch membranes work correctly.
	PROGRAM function	Check the PROGRAM function works properly. Check that programmed positions can be stored and used.
	AUTO RETURN function	Check that the AUTO RETURN function works correctly. Make sure the base actuator assembly does not freewheel when it is lowered all the way; it should be stopped by the base down limit switch. The base actuator should be within 1/4 in (6.35 mm) of freewheeling when base down limit switch is tripped. If necessary, adjust base down limit switch. Refer to para 4.10.
	Ball screws of actuator assemblies	Extend each actuator assembly and wipe ball screw threads down with a rag to remove foreign matter. Coat as much of the ball screw threads as possible with STP treatment oil or equivalent. Run each actuator assembly to both ends of its travel a couple of times to spread the oil evenly over all of the ball screw threads and then remove excess oil.
	Actuator assemblies	Operate each function and listen for squealing noises, indicating a bad actuator assembly. Coat ball screw of noisy actuator assembly with STP treatment oil or equivalent. If oil does not correct the problem, replace the noisy actuator. Refer to para 4.12, 4.15, and 4.17.
	Drift in chair	Check each actuator assembly to see if it drifts. Replace actuator assembly brake if necessary. Refer to para 4.11.
	Control disable switch	Check operation of control disable switch. Replace switch if necessary. Refer to para 4.6.
	Arm Rests	Check that arm rests are parallel to the seat section of chair when the back section is all the way up. If not adjust arm rests. Refer to para 4.19.
	Foot section	Check operation of foot section and foot section brake lever. Make sure brake lever holds foot section securely in place when released. Adjust if necessary. Refer to para 4.20.
	Base Subassembly	Check the base subassembly for excessive play. The base of the chair should not be able to be moved back and forth.
	Electrical receptacles	Check that the electrical receptacles are functioning properly. Replace electrical receptacles as necessary.
	Upholstery	Check all upholstery for rips, tears, or excessive wear. Replace cushions as necessary.
	Accessories	Check that all accessories have all of their components and that they function properly. If necessary, repair or replace the accessory.
	Reinitialization	Reinitialize the PC control board. Refer to para 4.2.
	Operational Test	Perform an Operational Test to determine if the chair is operating within its specifications (Refer to para 2.1). Replace or adjust any malfunctioning components.

© Midmark 1994 SF-1399

Printed in U.S.A.

SECTION IV
MAINTENANCE / SERVICE INSTRUCTIONS

4.1 Introduction

DANGER
Refer to the Operator Manual for complete instructions on operating the chair. Failure to do so could result in personal injury.

NOTE
Perform an operational test on the chair after the repair is completed to confirm the repair was properly made and that *all* malfunctions were repaired.

The following paragraphs contain removal, installation, repair, and adjustment procedures for the chair.

4.2 Reinitialization Procedure

A. Reinitialization Procedure #1 (Applies To Chair With An Old Style Foot Control)

NOTE
The PROGRAM footswitch must be depressed first, or the chair will begin to move.

(1) Simultaneously depress and hold the PROGRAM, TABLE UP, and TABLE DOWN footswitches for at least two seconds; then release footswitches. See Figure 4-1.

CAUTION
When the following step is performed, the chair will move all of its functions. Make sure chair is clear of all obstructions. Failure to do so could result in damage to chair or surrounding items.

(2) Depress and release the AUTO RETURN footswitch.

(3) Observe. Each actuator assembly will run for approximately 18 seconds to ensure that it reaches its mechanical home position (if the run time is less than 18 seconds, the procedure probably did not work and should be attempted again). The mechanical home position is: BACK UP function all the way up, TABLE DOWN function all the way down, and TILT DOWN function all the way down. When actuator assemblies stop running, the reinitialization procedure is complete.

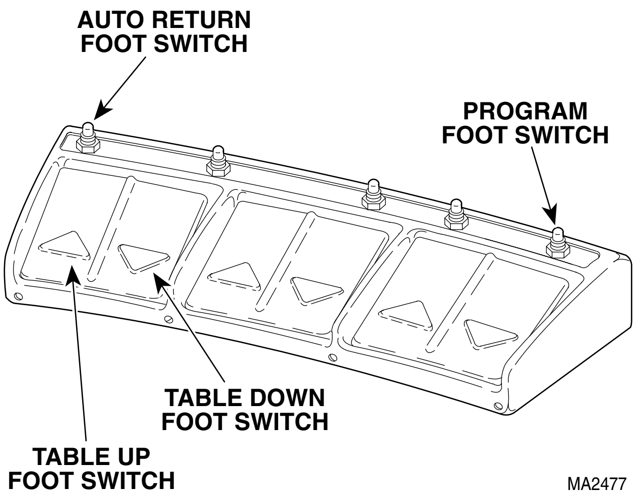

Figure 4-1. Reinitialization Procedure #1

(4) If first reinitialization procedure fails, unplug all actuator wire harnesses from PC board and run another reinitialization procedure. Then, reconnect wire harnesses.

B. Reinitialization Procedure #2 (Applies To Chair With An New Style Foot Control or a Hand Control)

NOTE
The PROGRAM switch must be depressed first, or the chair will begin to move.

(1) Simultaneously depress and hold the PROGRAM, POSITION "1", and POSITION "2" switches for at least two seconds; then release switches. See Figure 4-2.

CAUTION
When the following step is performed, the chair will move all of its functions. Make sure chair is clear of all obstructions. Failure to do so could result in damage to chair or surrounding items.

(2) Depress and release the AUTO RETURN switch.

(3) Observe. Each actuator assembly will run for approximately 18 seconds to ensure that it reaches its mechanical home position (if the run time is less than 18 seconds, the procedure probably did not work and should be attempted again). The mechanical home position is:

Return To Table Of Contents

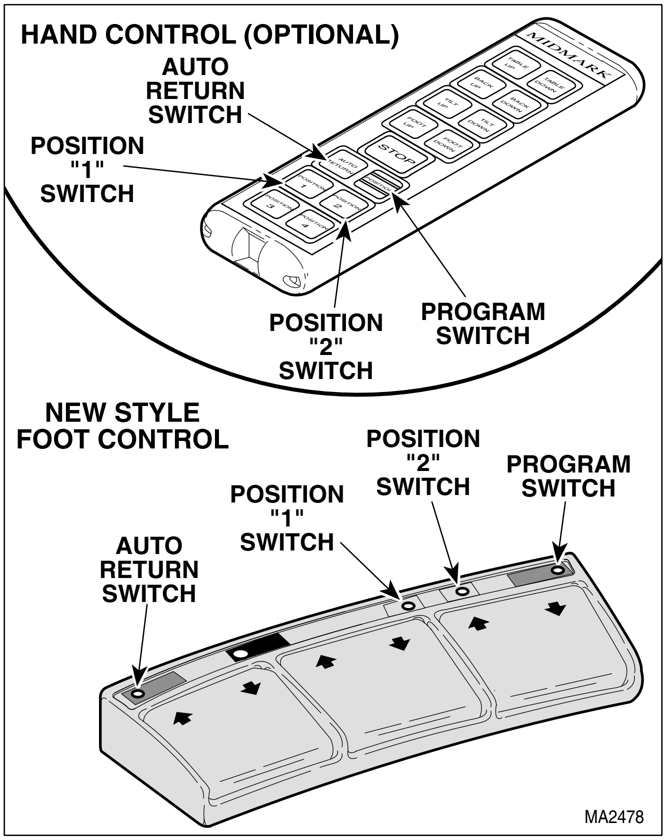

Figure 4-2. Reinitialization Procedure #2

BACK UP function all the way up, TABLE DOWN function all the way down, and TILT DOWN function all the way down. When actuator assemblies stop running, the reinitialization procedure is complete.

(4) If first reinitialization procedure fails, unplug all actuator wire harnesses from PC board and run another reinitialization procedure. Then, reconnect wire harnesses.

4.3 Table Top Removal / Installation

A. Removal

(1) Raise BACK UP and TILT UP functions all the way up.

> **DANGER**
> **Always unplug the power cord from the wall outlet before removing any of the chair's shrouds/covers or making any repairs to prevent the possibility of electrical shock. Failure to comply with these instructions could result in severe personal injury or death.**

(2) Unplug power cord from wall outlet.

(3) Unplug power cord wire harness (1, Figure 4-3) from wire harness (2).

(4) Disconnect cord set (3) from modular coupler (4).

> **NOTE**
> Units with Serial Numbers BP-1000 thru BP-1363 have only three wires to disconnect. This is because these units do not have a base down limit switch.

(5) Tag and disconnect four wires (5) from four wires (6).

(6) Cut cable tie which is securing wires/wire harness to table top.

(7) Remove four nuts (7) and lockwashers (8) from studs (9).

> **DANGER**
> **Table top weighs approximately 140 lbs (63.5 kg) (without upholstery). Use an assistant to help in removing table top. Use proper lifting techniques to prevent back strain. Failure to do so could result in serious personal injury.**

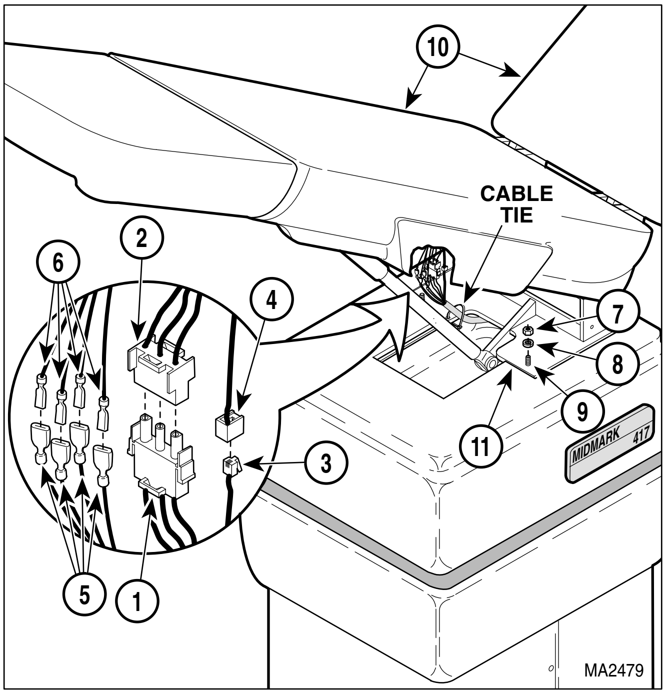

Figure 4-3. Table Top Removal / Installation

(8) With the help of an assistant, remove table top (10) from plate (11).

B. Installation

(1) With the help of an assistant, install table top (10) on plate (11) and secure with four lockwashers (8) and nuts (7).

> **NOTE**
> Units with Serial Numbers BP-1000 thru BP-1363 have only three wires to disconnect. This is because these units do not have a base down limit switch.

(2) Connect four wires (5) to four wires (6).

(3) Connect cord set (3) to modular coupler (4).

(4) Connect power cord wire harness (1) to wire harness (2).

(5) Secure wires/wire harness to table top with cable tie.

(6) Plug power cord into wall receptacle.

4.4 Shrouds Removal / Installation

A. Removal

(1) Remove table top (Refer to para 4.3).

(2) Remove four screws (1, Figure 4-4); then remove base outer shroud (2) and outer shroud (3) as an assembly from base subassembly (4).

(3) Remove shims (5), making sure to note number and location of shims for installation.

> **NOTE**
> Inner shroud can be raised to gain access to base subassembly components without removing power cord. Only remove power cord if inner shroud is being removed.

(4) Remove power cord (Refer to para 4.5).

(5) Disconnect cord set (6) from modular coupler (7).

(6) Remove four screws (8) and inner shroud (9) from base subassembly (4).

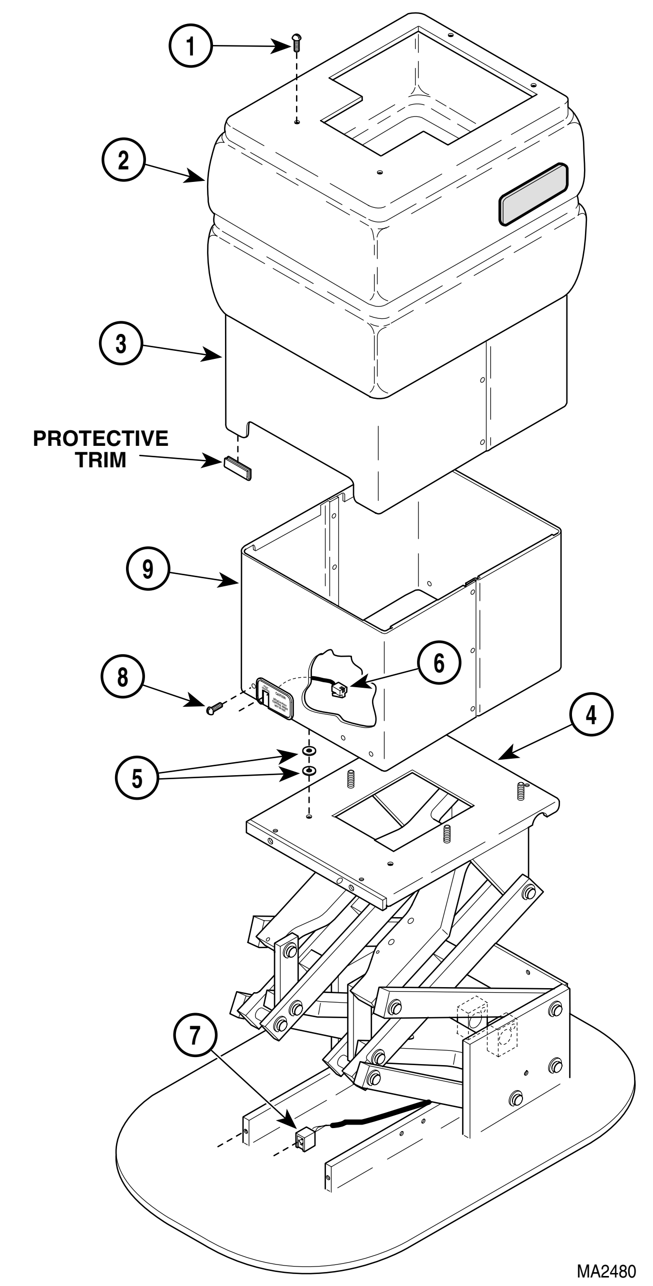

Figure 4-4. Shrouds Removal / Installation

B. Installation

(1) Install inner shroud (9) on base subassembly (4) and secure with four screws (8).

(2) Connect cord set (6) to modular coupler (7).

(3) Install power cord (Refer to para 4.5).

Return To Table Of Contents

(4) Place shims (5) in same location on base subassembly (4) in which they were removed from.

NOTE
Make sure the shims are held in place by a screw.

(5) Install outer shroud (3) and base outer shroud (2) as an assembly on base subassembly (4) and secure with four screws (1).

(6) Check to make sure there is a piece of protective trim on each corner of the outer shroud (3). If not, find and reinstall.

(7) Install table top (Refer to para 4.3).

4.5 Power Cord Removal / Installation

A. Removal

(1) If possible, raise TILT UP function all the way up.

DANGER
Always unplug the power cord from the wall outlet before removing any of the chair's shrouds/covers or making any repairs to prevent the possibility of electrical shock. Failure to comply with these instructions could result in severe personal injury or death.

(2) Unplug power cord from wall outlet.

(3) Disconnect power cord wire harness (1, Figure 4-5) from wire harness (2).

(4) Raise up outer shroud (3) and use a support to hold it there.

(5) Remove three screws (4) and three wire clips (5) from base subassembly (6).

(6) Cut cable ties which are securing all wires/wire harnesses together.

(7) Remove strain relief bushing (7) from inner shroud (8) and then remove power cord (1) from chair.

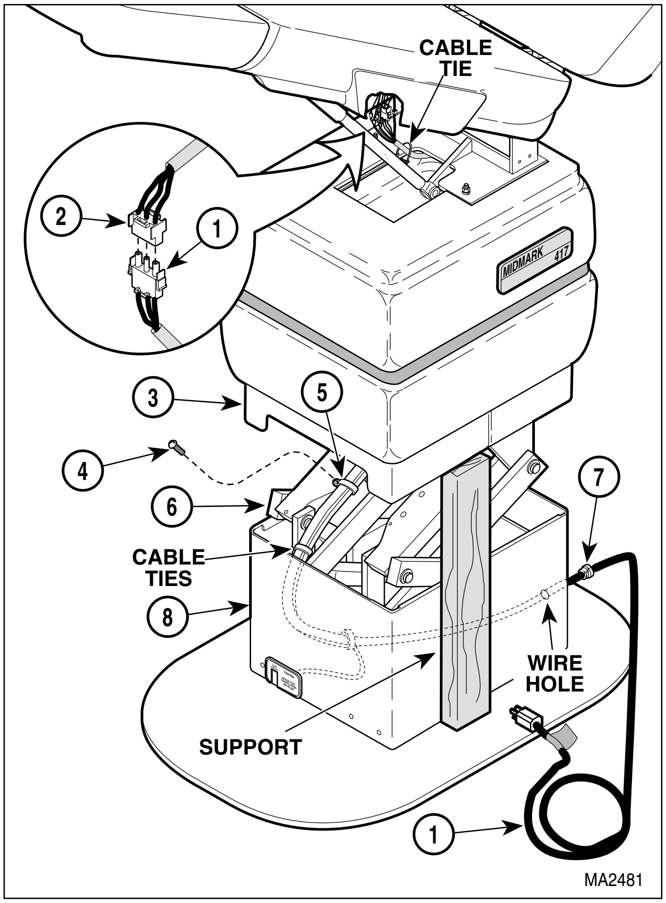

Figure 4-5. Power Cord Removal / Installation

B. Installation

(1) Feed power cord (1) thru wire hole in inner shroud (8).

(2) Connect power cord wire harness (1) to wire harness (2).

(3) Secure wires/wire harness to base subassembly (6) with three wire clips (5) and screws (4).

(4) Secure all wires/wire harnesses together with cable ties.

(5) Install strain relief bushing (7) around power cord (1) and then insert strain relief bushing into wire hole in inner shroud (8).

(6) If chair has been without power for more than three days, perform the reinitialization procedure (Refer to para 4.2).

4.6 Control Disable Switch Removal / Installation

A. Removal

DANGER
Always unplug the power cord from the wall outlet before removing any of the chair's shrouds/covers or making any repairs to prevent the possibility of electrical shock. Failure to comply with these instructions could result in severe personal injury or death.

(1) Unplug power cord from wall outlet.

NOTE
Control disable switch can be located on either side of the chair. The following procedure shows the switch being removed from the patient's left side of the chair.

(2) Remove four screws (1, Figure 4-6) and partially separate control cover (2) from plastic seat section (3).

(3) Disconnect two wires (4) from control disable switch (5).

(4) Press on four tabs of of control disable switch (5), while simultaneously pulling control disable switch out of control cover (2).

B. Installation

(1) Push control disable switch (5) into control cover (2) until it "pops" into place, making sure terminals "1" and "2" are pointing toward foot end of table.

(2) Connect two wires (4) to control disable switch (5).

(3) Install control cover (2) on plastic seat section (3) and secure with four screws (1).

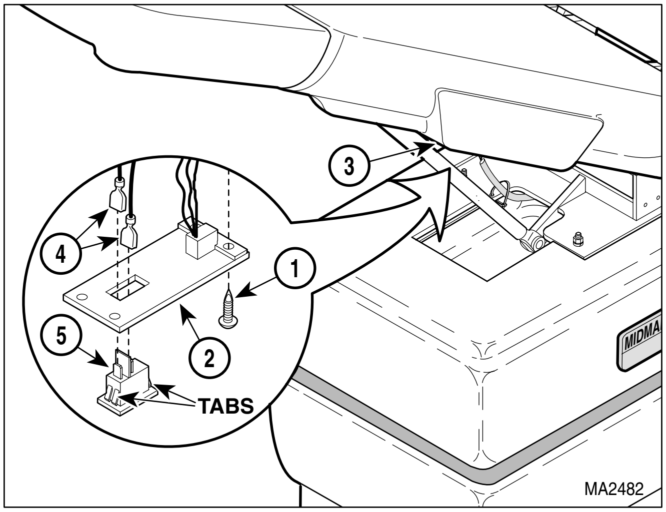

Figure 4-6. Control Disable Switch Removal / Installation

4.7 Hand Control Plug-In Port Removal / Installation

A. Removal

DANGER
Always unplug the power cord from the wall outlet before removing any of the chair's shrouds/covers or making any repairs to prevent the possibility of electrical shock. Failure to comply with these instructions could result in severe personal injury or death.

(1) Unplug power cord from wall outlet.

(2) Remove four screws (1, Figure 4-7) and partially separate control cover (2) from plastic seat section (3).

(3) Remove clip (4) and hand control port (5) from control cover (2).

(4) Remove six screws (6) and partially separate receptacle cover (7) from plastic seat section (3).

(5) Disconnect connector of hand control port (5) from modular coupler (8).

Return To Table Of Contents

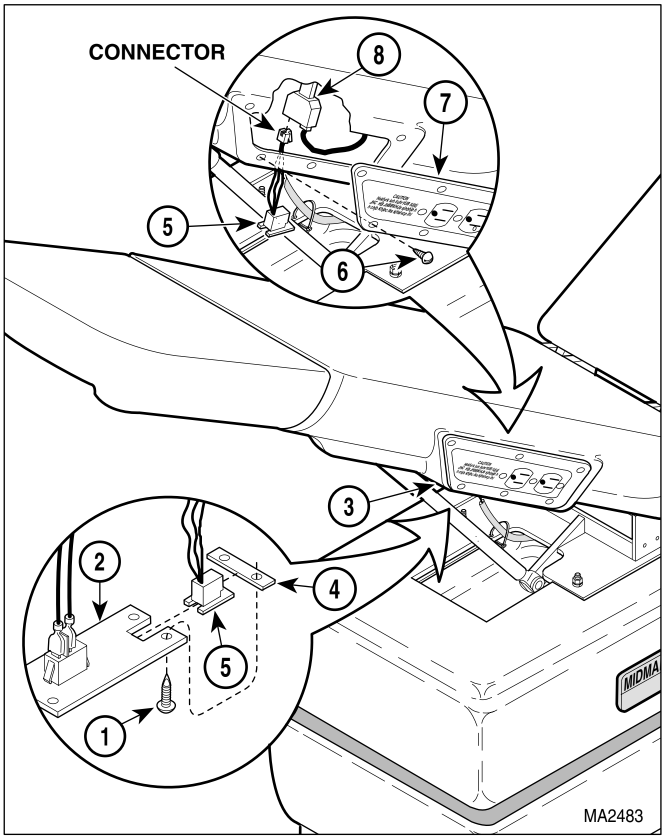

Figure 4-7. Hand Control Plug-In Port Removal / Installation

B. Installation

(1) Connect connector of hand control port (5) to modular coupler (8).

(2) Install receptacle cover (7) on plastic seat section (3) and secure with six screws (6).

(3) Install hand control port (5) on control cover (2) and secure with clip (4).

(4) Install control cover (2) on plastic seat section (3) and secure with four screws (1).

(5) Plug power cord into wall outlet.

4.8 PC Control Board / Program PC Board Removal / Installation

A. Removal

DANGER
Always unplug the power cord from the wall outlet before removing any of the chair's shrouds/covers or making any repairs to prevent the possibility of electrical shock. Failure to comply with these instructions could result in severe personal injury or death.

(1) Unplug power cord from wall outlet.

(2) Remove four screws (1, Figure 4-8) and back cover (2) from plastic back section (3).

(3) Tag and disconnect five wire harnesses (4) from PC control board (5).

(4) Disconnect cord set (6) from PC control board (5).

(5) Remove seven nuts (7) and lockwashers (8) from studs of back weldment (9).

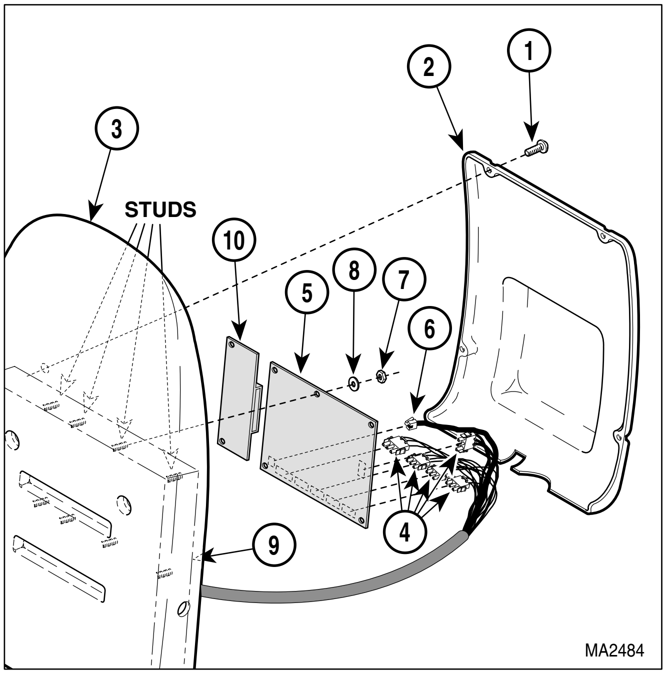

Figure 4-8 PC Control Board / Program PC Board Removal / Installation

NOTE
The new style PC control board is a single board which contains both the PC control board and the PC program board. Step 7 does not apply to units with the new style board.

(6) Remove PC control board (5) and PC program board (10) as an assembly from studs of back weldment (9).

(7) Disconnect PC program board (10) from PC control board (5).

B. Installation

NOTE
The new style PC control board is a single board which contains both the PC control board and the PC program board. Step 1 does not apply to units with the new style board.

(1) Connect PC program board (10) to PC control board (5).

(2) Install assembled PC program board (10) and PC control board (5) on studs of back weld-ment (9) and secure with seven lockwashers (8) and nuts (7).

(3) Connect cord set (6) to PC control board (5).

(4) Connect five wire harnesses (4) to PC control board (5).

(5) Install back cover (2) on plastic back section (3) and secure with four screws (1).

(6) Plug power cord into wall outlet.

(7) Perform the reinitialization procedure (Refer to para 4.2).

4.9 Foot Control Plug-In Port Removal / Installation

A. Removal

(1) Raise outer shroud (1, Figure 4-9) and prop it up with a support.

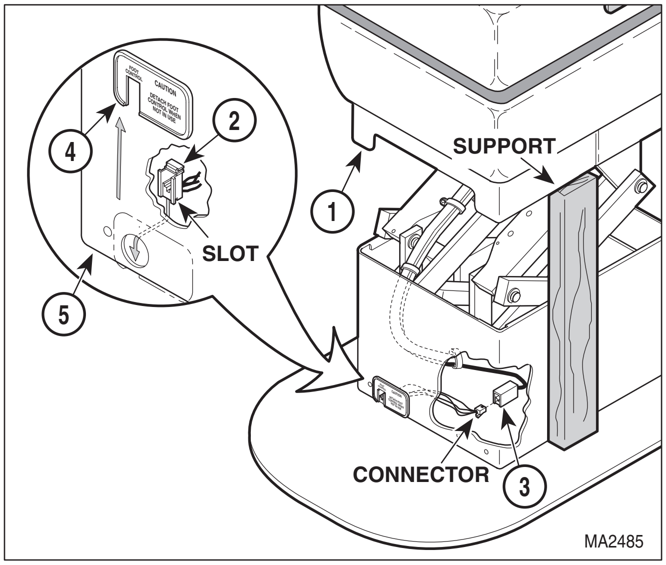

Figure 4-9. Foot Control Plug-In Port Removal / Installation

(2) Disconnect connector of foot control port (2) from modular coupler (3).

NOTE
To remove cover plate, slide upward until clear of foot control port and then pull outward.

The cover plate is held on by a double sided tape.

(3) Carefully pry cover plate (4) off of inner shroud (5).

(4) Remove foot control port (2) from inner shroud (5), by pulling foot control port upward and then toward inside of inner shroud.

B. Installation

(1) Install foot control port (2) on inner shroud (5) by engaging slot of foot control port with inner shroud.

NOTE
If cover plate does not stick(adhere) properly, add some double sided tape to back side of cover plate.

(2) Install cover plate (4) on inner shroud (5) by sliding cover plate downward into place.

(3) Connect connector of foot control port (2) to modular connector (3).

(4) Remove support and lower outer shroud (1).

4.10 Base Down Limit Switch Removal / Installation

> **NOTE**
> Units with Serial Numbers BP-1000 thru BP-1363 do not have a base down limit switch.

A. Removal

(1) Remove table top (Refer to para 4.3).

(2) Remove shrouds; only steps 2 and 3 need to be performed (Refer to para 4.4A).

(3) Disconnect two wires (1, Figure 4-10) from base down limit switch (2).

(4) Using a pencil, trace the outline of the switch mount (3).

(5) Remove two screws (4), lockwashers (5), and switch mount (3) from base subassembly (6).

(6) Remove two nuts (7), lockwashers (8), screws (9), and base down limit switch (2) from switch mount (3).

B. Installation

(1) Install base down limit switch (2) on switch mount (3) and secure with two screws (9), lockwashers (8), and nuts (7).

> **NOTE**
> Because of the shrouds, the base down limit switch cannot be adjusted when the base actuator is connnected to power - it is not accessible. Aligning the switch mount with pencil marks ensures that the base down limit switch will be in proper position.

(2) Position switch mount (3) on base subassembly (6) and align it with pencil marks; then secure switch mount in position with two lockwashers (5) and screws (4).

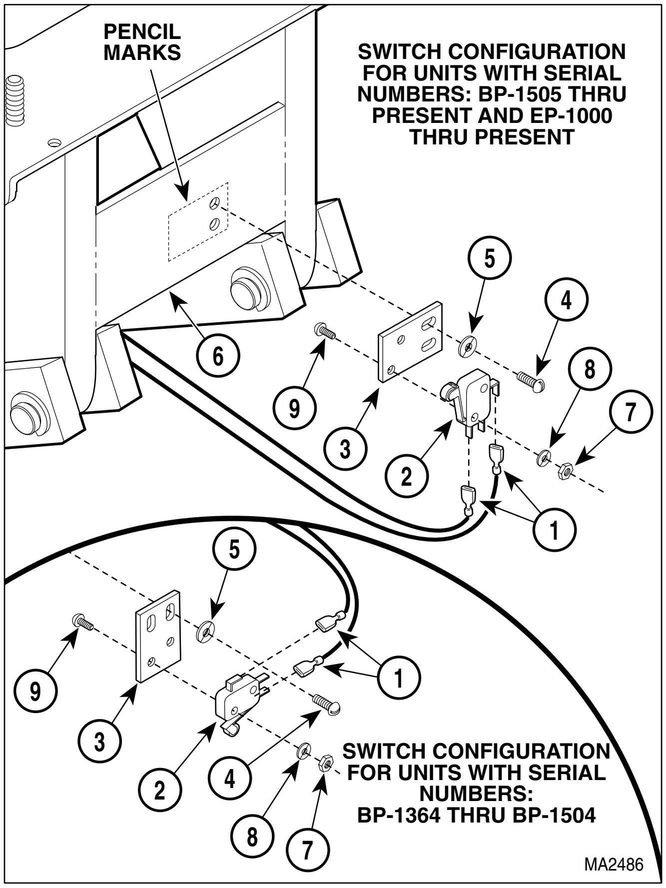

Figure 4-10. Base Down Limit Switch Removal / Installation

(3) Connect two wires (1) to base down limit switch (2).

(4) Install shrouds; only steps 4 thru 6 need to be performed (Refer to para 4.4B).

(5) Install table top (Refer to para 4.3).

4.11 Actuator Motor / Actuator Brake Removal / Installation (Applies To All Three Actuator Assemblies - Domestic Units Only)

A. Removal

(1) Remove malfunctioning actuator assembly:
Base actuator assembly (Refer to para 4.12).
Tilt actuator assembly (Refer to para 4.15).
Back actuator assembly (Refer to para 4.17).

© Midmark 1994 SF-1399

Return To Table Of Contents

(2) Remove two nuts (1, Figure 4-11) and actuator motor (2) from actuator mechanism (3).

(3) Remove two shoulder washers (4) from actuator mechanism (3).

(4) Remove spacer (5) and motor coupler (6) from shaft of actuator motor (2).

> **NOTE**
> A needle nose pliers should be used to extract the actuator brake from the actuator mechanism. Grasp the raised round plate of the actuator brake with the pliers and pull.

(5) Remove actuator brake (7) and rubber damper (8) from shaft of actuator mechanism (3).

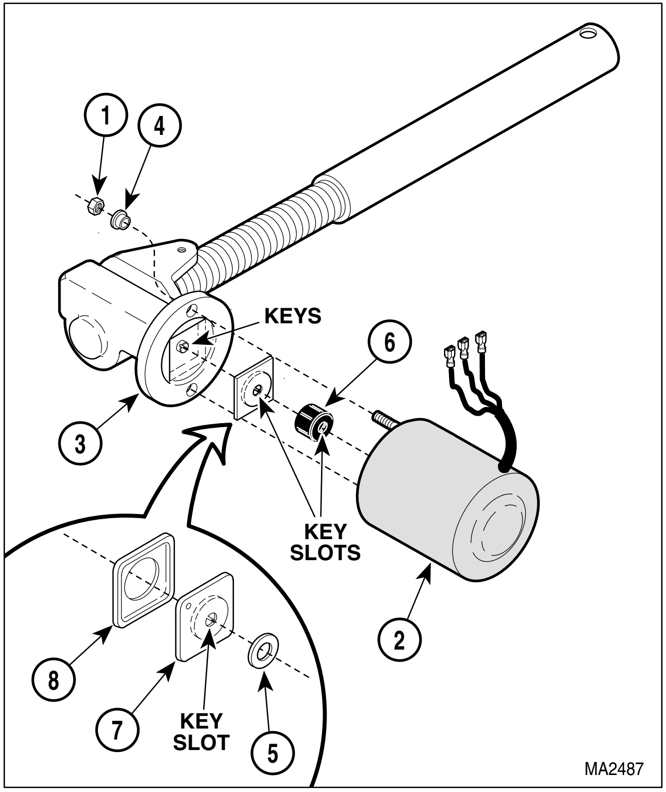

Figure 4-11. Actuator Motor / Actuator Brake Removal / Installation

B. Installation

> **NOTE**
> The rubber damper must be installed so its flat side faces the inside of the actuator mechanism. The actuator brake must be installed so its flattest side faces outward. The shaft of the actuator mechanism may be turned with a screwdriver to help align the keys of the actuator mechanism shaft with the key slots in actuator brake.

(1) Install rubber damper (8), actuator brake (7), and spacer (5) in actuator mechanism (3).

(2) Install motor coupler (6) on shaft of actuator motor (2).

(3) Install two shoulder washers (4) in actuator mechanism (3).

(4) Align keys of actuator mechanism (3) shaft with key slots of motor coupler (6) and then install actuator motor (2) on actuator mechanism (3) and secure with two nuts (1).

(5) Install actuator assembly:
Base actuator assembly (Refer to para 4.12).
Tilt actuator assembly (Refer to para 4.15).
Back actuator assembly (Refer to para 4.17).

(6) Check actuator assembly for proper operation. The actuator assembly should run normally and should not make a grinding noise; this indicates that key slots of motor coupler were not aligned properly with keys of actuator mechanism (the grinding noise also indicates that the motor coupler is being damaged). The actuator assembly should brake properly.

4.12 Base Actuator Assembly Removal / Installation (Domestic Units Only)

A. Removal

(1) If possible, raise TABLE UP function all the way up.

(2) Lift & support middle shrouds (1, Figure 4-12).

NOTE
Models with serial numbers prior to BP6172 do not have Base Up limit switch.

(3) Move wire (2) from **N.C.** terminal of base up limit switch (3) to **N.O.** terminal as shown.

(4) Depress Base Up foot pedal. *[Table should raise slightly, then stop].*

(5) Remove table top (Refer to para 4.3).

(6) Remove shrouds (Refer to para 4.4).

(7) Remove two e-rings (1, Figure 4-13) from clevis pin (2).

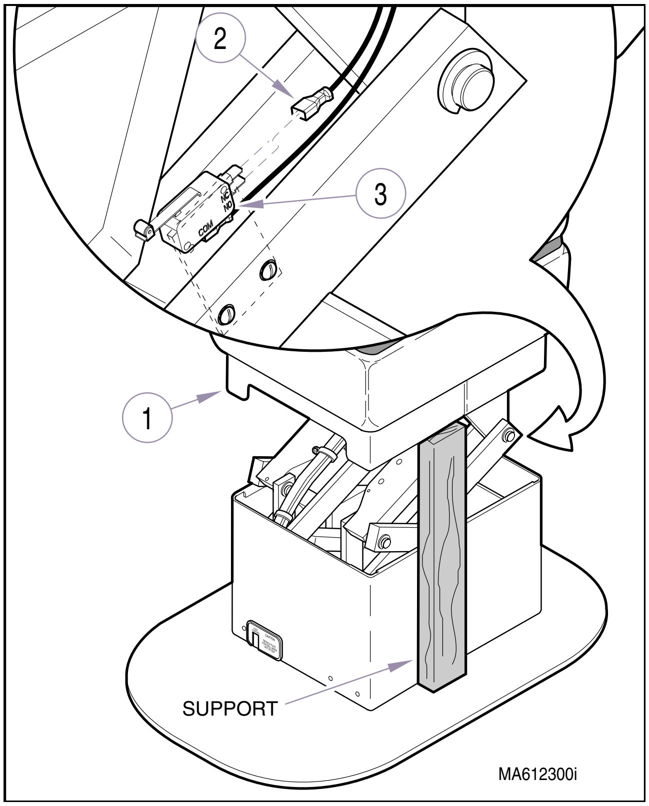

Figure 4-12. Base Up Limit Switch

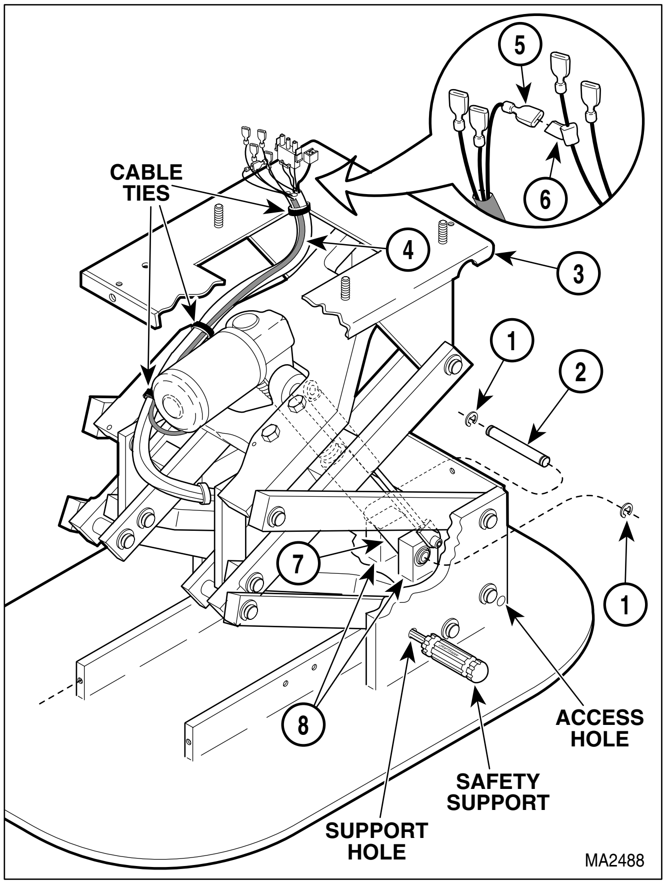

Figure 4-13. Base Actuator Assembly Disconnection/Connection

DANGER
Gas spring(s) will cause the base subassembly to extend fully once the clevis pin is removed. Failure to keep base subassembly under control could result in injury to technician.

(8) Have an assistant apply downward pressure on base subassembly (3), while driving out clevis pin (2). Allow base subassembly to extend fully.

(9) Support base subassembly (3) by inserting a safety support (large punch or screwdriver) thru both support holes. *[It may be necessary to lift up slightly on the base subassembly].*

(10) Cut cable ties securing the base actuator wire harness (4) to other wire harnesses.

(11) Tag and disconnect wire (5) from wire tap (6), if unit has base down limit switch.

Return To Table Of Contents

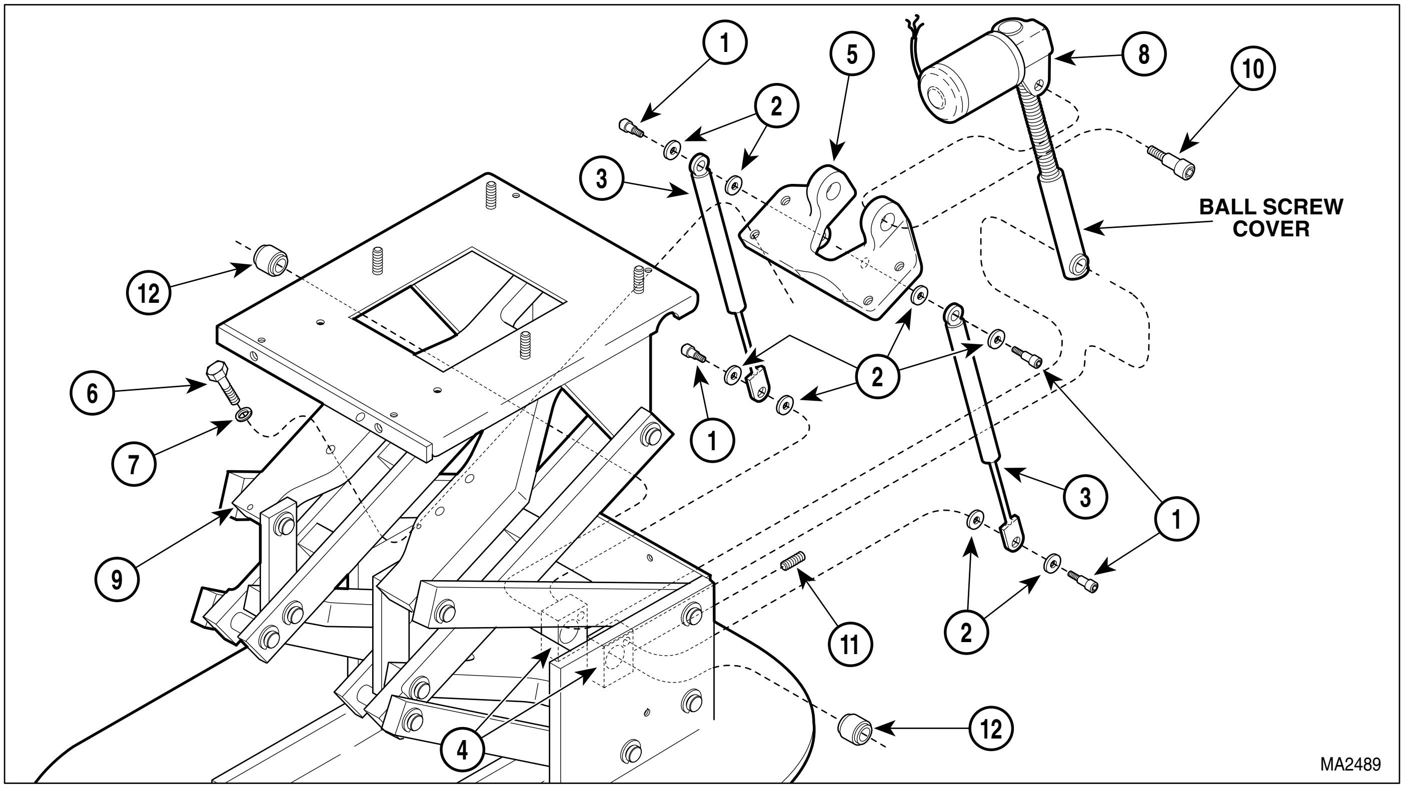

Figure 4-14. Base Actuator Assembly Removal / Installation

> **DANGER**
> **Make sure base subassembly is supported as instructed in step 9. Failure to do so will allow base subassembly to collapse which could result in serious or fatal injury.**

> **NOTE**
> Units with Serial Numbers BP-1000 thru BP-1363 will only have one gas spring; later units have two.

(12) Remove two shoulder screws (1, Figure 4-14), four washers (2), and gas spring (3) from brackets (4 and 5). If applicable, repeat step for remaining gas spring.

> **NOTE**
> The ball screw cover may need to be rotated to shorten the actuator length and allow it to be removed.

(13) Remove four screws (6), lockwashers (7), bracket (5), and base actuator assembly (8) from base subassembly (9).

(14) Remove two shoulder screws (10) and bracket (5) from base actuator assembly (8).

(15) If necessary, loosen two setscrews (11) and remove two bearings (12) from brackets (4).

B. Installation

(1) If removed, install one bearing (12, Figure 4-14) in each bracket (4) and secure with a setscrew (11).

(2) Coat threads of two shoulder screws (10) with removeable threadlocking adhesive (Loctite 242).

(3) Install actuator bracket (5) on base actuator assembly (8) and secure with two shoulder screws (10).

(4) Install base actuator assembly (8) on base subassembly (9) and secure with lockwashers (7) and four screws (6). Tighten four screws to 23 - 28 ft-lbs (31.2 - 38 N•m).

(5) Coat four shoulder screws (1) and eight washers (2) with grease.

Return To Table Of Contents

NOTE
The base subassembly may need to be raised (extended) slightly in order to align gas spring with brackets.
Units with Serial Numbers BP-1000 thru BP-1363 will only have one gas spring; later units have two.

(6) Install gas spring (3) on brackets (4 and 5) and secure with four washers (2) and two shoulder screws (1). If applicable, repeat step for remaining gas spring.

(7) Remove safety supports from support holes. See Figure 4-13.

NOTE
The ball screw cover may be rotated to lengthen the actuator length and make installation easier.

Insert a punch thru access hole to assist in installing clevis pin.

(8) Push base subassembly (3, Figure 4-13) downward until base actuator assembly (7) is aligned with brackets (8); then secure base actuator assembly in position with clevis pin (2) and two e-rings (1).

(9) Connect wire (5) to wire tap (6), if unit has base down limit switch.

(10) Secure base actuator wire harness (4) to other wire harnesses with cable ties.

(11) Move wire (2, Figure 4-12) from **N.O.** terminal of base up limit switch (3) to **N.C.** terminal.

(11) Install shrouds (Refer to para 4.4).

(12) Install table top (Refer to para 4.3).

(13) Plug power cord into wall outlet.

NOTE
The following step is necessary. Otherwise, the PC control board's home position will not match the mechanical home position of the base actuator assembly.

(14) Run the AUTO RETURN function.

4.13 Gas Spring Removal / Installation

A. Removal

NOTE
Steps 1 & 2 apply only to units with serial numbers: BP6131, BP6172 - present, & EP1079 - present.

(1) Raise table all the way up; then lift outer shroud (1, Figure 4-15) and use a support to hold it up.

(2) Move wire (2) from **N.C.** terminal of base up limit switch (3) to **N.O.** terminal.

(3) Press Table Up footswitch until table stops moving.

(4) Remove table top (Refer to para 4.3).

(5) Remove shrouds (Refer to para 4.4).

DANGER
Make sure base subassembly is fully extended to remove tension from gas springs. Failure to do so could allow gas springs to "fly", resulting in serious personal injury.

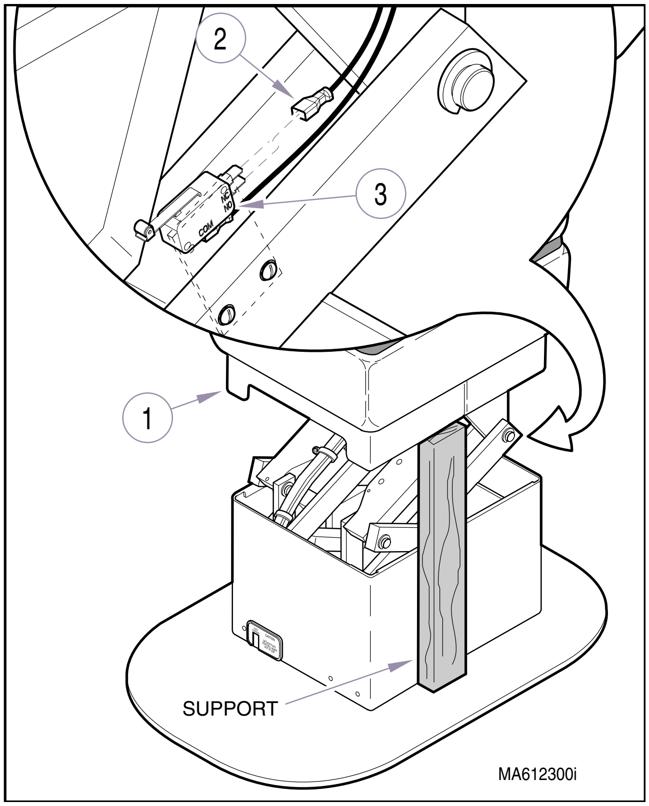

Figure 4-15. Base Up Limit Switch

Return To Table Of Contents

NOTE
Older units have only one gas spring.

(6) Remove two shoulder screws (1, Figure 4-16), four washers (2), and gas spring (3) from brackets (4 and 5). If removing both gas springs, repeat step for remaining gas spring.

B. Installation

(1) Coat shoulder screws (1, Figure 4-16) and washers (2) with grease.

NOTE
If necessary, raise the base subassembly (by hand) to align gas spring with brackets.

(2) Install gas spring (3) on brackets (4 and 5) and secure with four washers (2) and two shoulder screws (1). If both gas springs were removed, repeat step for remaining gas spring.

(3) Move wire (2, Figure 4-15) from **N.O.** terminal of base up limit switch (3) to **N.C.** terminal.

(3) Install shrouds (Refer to para 4.4).

(4) Install table top (Refer to para 4.3).

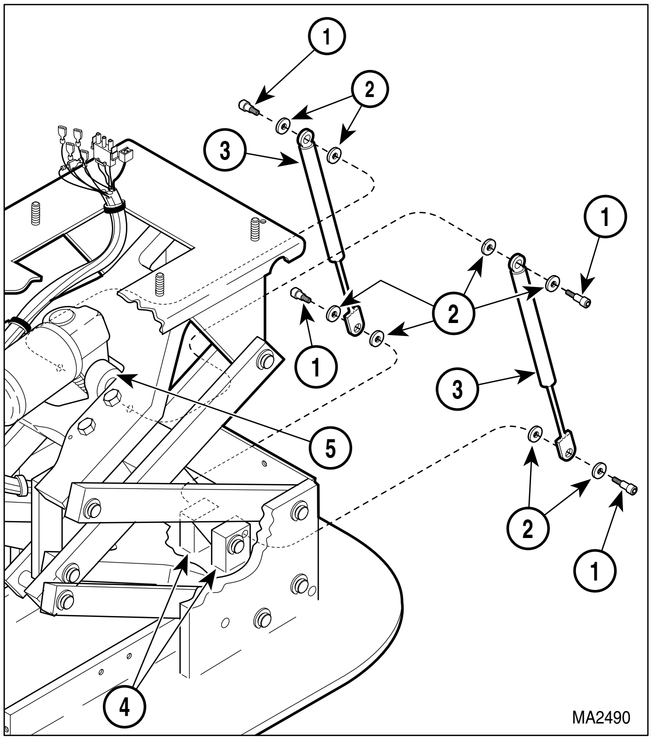

Figure 4-16. Gas Spring Removal / Installation

4.14 Base Capacitor Removal / Installation (Domestic Units Only)

A. Removal

(1) Raise BACK UP function all the way up.

DANGER
Always unplug the power cord from the wall outlet before removing any of the chair's shrouds/covers or making any repairs to prevent the possibility of electrical shock. Failure to comply with these instructions could result in severe personal injury or death.

(2) Unplug power cord from wall outlet.

(3) Remove four screws (1, Figure 4-17) and back cover (2) from back plastic section (3).

DANGER
The capacitor contains stored electricity. Never touch terminals of capacitor, even if power has been disconnected. Always discharge capacitor before touching capacitor terminals or wires. Failure to comply with these instructions could result in serious personal injury or death.

(4) Discharge base capacitor (4).

(5) Disconnect two wires (5) from terminals of base capacitor (4).

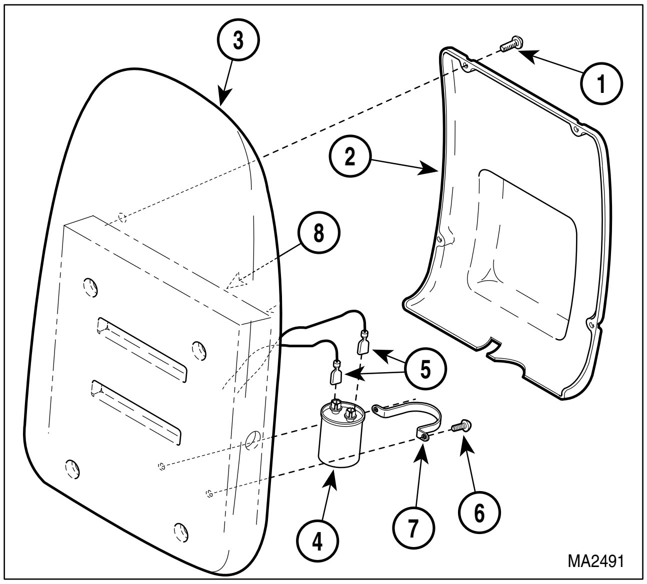

Figure 4-17. Base Capacitor Removal / Installation

(6) Remove two screws (6), capacitor clamp (7), and base capacitor (4) from back weldment (8).

B. Installation

(1) Install base capacitor (4) on back weldment (8) and secure with capacitor clamp (7) and two screws (6).

(2) Connect one wire (5) to each terminal group of base capacitor (4).

(3) Install back cover (2) on plastic back section (3) and secure with four screws (1).

(4) Plug power cord into wall receptacle.

4.15 Tilt Actuator Assembly (Domestic Units Only)

A. Removal

(1) Raise TILT UP function all the way up.

> **DANGER**
> **Always unplug the power cord from the wall outlet before making any repairs to prevent the possibility of electrical shock. Failure to comply could result in personal injury.**

(2) Unplug power cord from wall outlet.

(3) Cut cable ties securing wires/wire harnesses to tilt actuator assembly (1, Figure 4-18).

(4) Tag and disconnect three tilt actuator wires (2) from three wires (3).

> **NOTE**
> Clevis pin can only be removed in one direction as shown in illustration.

(5) While supporting foot end of table top, remove two e-rings (4), clevis pin (5), and motor end of tilt actuator assembly (1) from seat weldment bracket (6).

(6) While supporting foot end of table top, remove two e-rings (7), clevis pin (8), and tilt actuator assembly (1) from bracket (9).

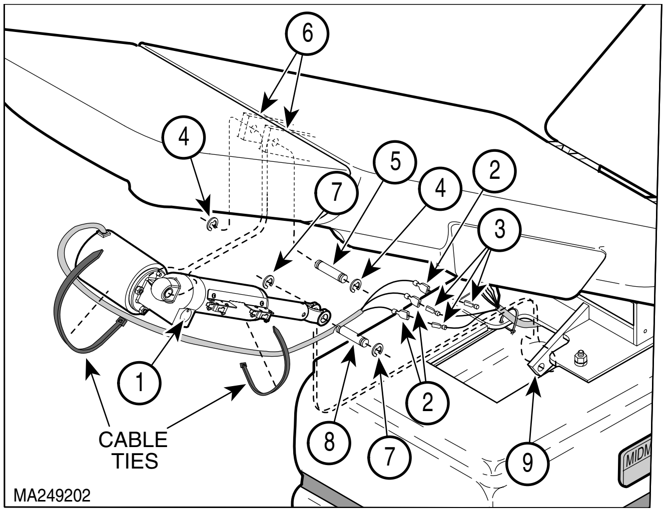

Figure 4-18. Tilt Actuator Assembly Removal / Installation

B. Installation

> **CAUTION**
> Do not manually turn actuator shaft by hand (Figure 4-19). Doing so could result in misalignment of internal limit switches.
> Turn yoke *only* to align mounting holes.

(1) Secure yoke (Figure 4-19) in position by tightening two setscrews .

(2) While supporting foot end of table top, install tilt actuator assembly (1, Figure 4-18) on bracket (9) and secure with clevis pin (8) and two e-rings (7).

(3) While supporting foot end of table top, install motor end of tilt actuator assembly (1) on seat weldment bracket (6) and secure with clevis pin (5) and two e-rings (4).

(4) Connect three tilt actuator wires (2) to three wires (3).

(5) Secure wires/wire harnesses to tilt actuator assembly (1) with cable ties.

(6) Plug power cord into wall outlet.

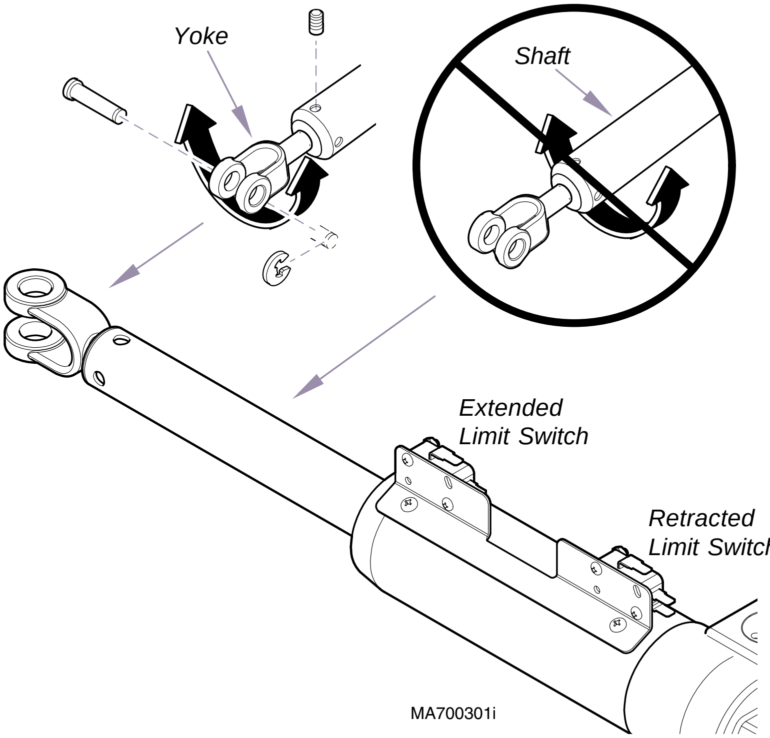

CAUTION
Do *not* rotate actuator shaft. Rotate yoke only to align holes.

Figure 4-19. Tilt Actuator

NOTE
The following step is necessary. Otherwise, the PC control board's home position will not match the mechanical home position of the base actuator assembly.

(7) Run the AUTO RETURN function.

4.16 Tilt Capacitor Removal / Installation (Domestic Units Only)

A. Removal

(1) If possible, raise TILT UP function all the way up.

DANGER
Always unplug the power cord from the wall outlet before making any repairs to prevent the possibility of electrical shock. Failure to comply could result in personal injury.

(2) Unplug power cord from wall outlet.

(3) Using a screwdriver, pry tab of mounting bracket (1, Figure 4-20) outward and separate tilt capacitor (2) from mounting bracket.

(4) Remove capacitor cap (3) from tilt capacitor (2).

DANGER
The capacitor contains stored electricity. Never touch terminals of capacitor, even if power has been disconnected. Always discharge capacitor before touching capacitor terminals or wires. Failure to comply could result in serious personal injury.

(5) Discharge tilt capacitor (2).

(6) Disconnect two wires (4) from terminals of tilt capacitor (2) and remove tilt capacitor.

Return To Table Of Contents

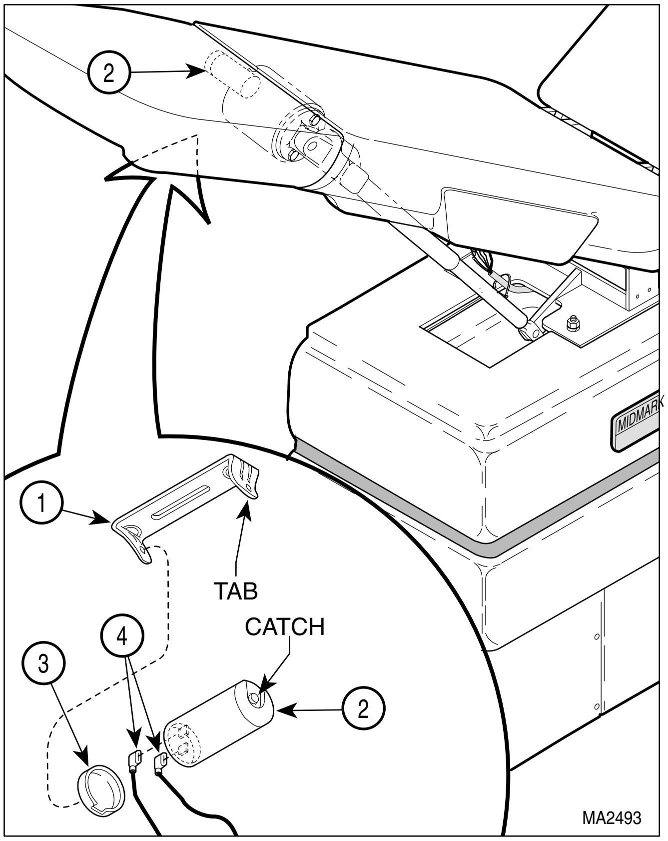

Figure 4-20. Tilt Capacitor

B. Installation

(1) Connect one wire (4) to each terminal group of tilt capacitor (2).

(2) Install capacitor cap (3) on tilt capacitor (2).

(3) Position the bottom of tilt capacitor (2) on mounting bracket (1) and then push the top of the capacitor inward. Using a screwdriver, force the tab of the mounting bracket (1) down over the catch of the capacitor cap (3). Make sure tilt capacitor (2) is held firmly in place.

(4) Plug power cord into wall outlet.

4.17 Back Actuator Assembly (Domestic Units Only)

A. Removal

(1) Raise TILT UP function all the way up.

(2) If possible, raise BACK UP function all the way up.

> **DANGER**
> **Always unplug the power cord from the wall outlet before making any repairs to prevent the possibility of electrical shock. Failure to comply could result in personal injury.**

(3) Unplug power cord from wall outlet.

(4) Cut cable tie securing wires to motor of back actuator assembly (1, Figure 4-21).

(5) Tag and disconnect three back actuator wires (2) from three wires (3).

> **DANGER**
> **Support the back section during the next two steps. Failure to support back section could result in injury to technician.**

> **CAUTION**
> The back section of the table top must be supported during the next two steps. If possible, get an assistant to assist in supporting the back section. Otherwise, use another method to support back section. Failure to do so could result in damage to chair.

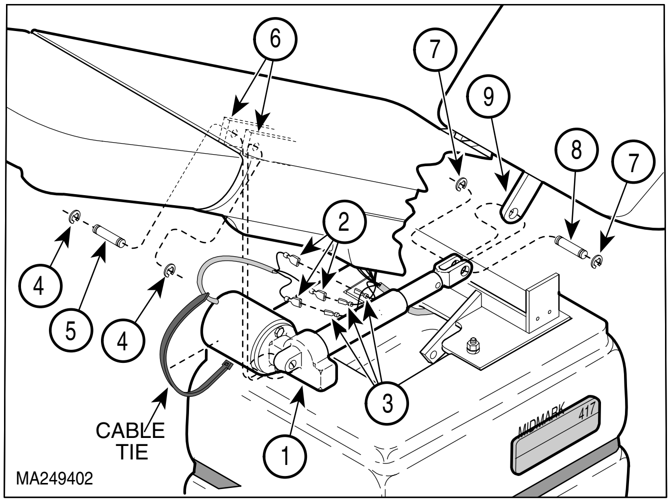

Figure 4-21. Back Actuator Assembly

(6) While supporting back section of table top, remove two e-rings (4), clevis pin (5), and back actuator assembly (1) from seat weldment bracket (6).

NOTE
Clevis pin can only be removed in one direction as shown in illustration.

(7) While supporting back section of table top, remove two e-rings (7), clevis pin (8), and back actuator assembly (1) from back weldment bracket (9).

B. Installation

CAUTION
Do not manually turn actuator shaft by hand (Figure 4-22). Doing so could result in misalignment of internal limit switches.
Turn yoke *only* to align mounting holes.

(1) Secure yoke (Figure 4-22) in position by tightening two setscrews .

(2) While supporting back section of table top, install back actuator assembly (1) on back weldment bracket (9) and secure with clevis pin (8) and two e-rings (7).

(3) While supporting back section of table top, install back actuator assembly (1) on seat weldment bracket (6) and secure with clevis pin (5) and two e-rings (4).

(4) Connect three back actuator wires (2) to three wires (3).

(5) Secure wires to motor of back actuator assembly (1) with a cable tie.

(6) Plug power cord into wall receptacle.

NOTE
The following step is necessary. Otherwise, the PC control board's home position will not match the mechanical home position of the base actuator assembly.

(7) Run the AUTO RETURN function.

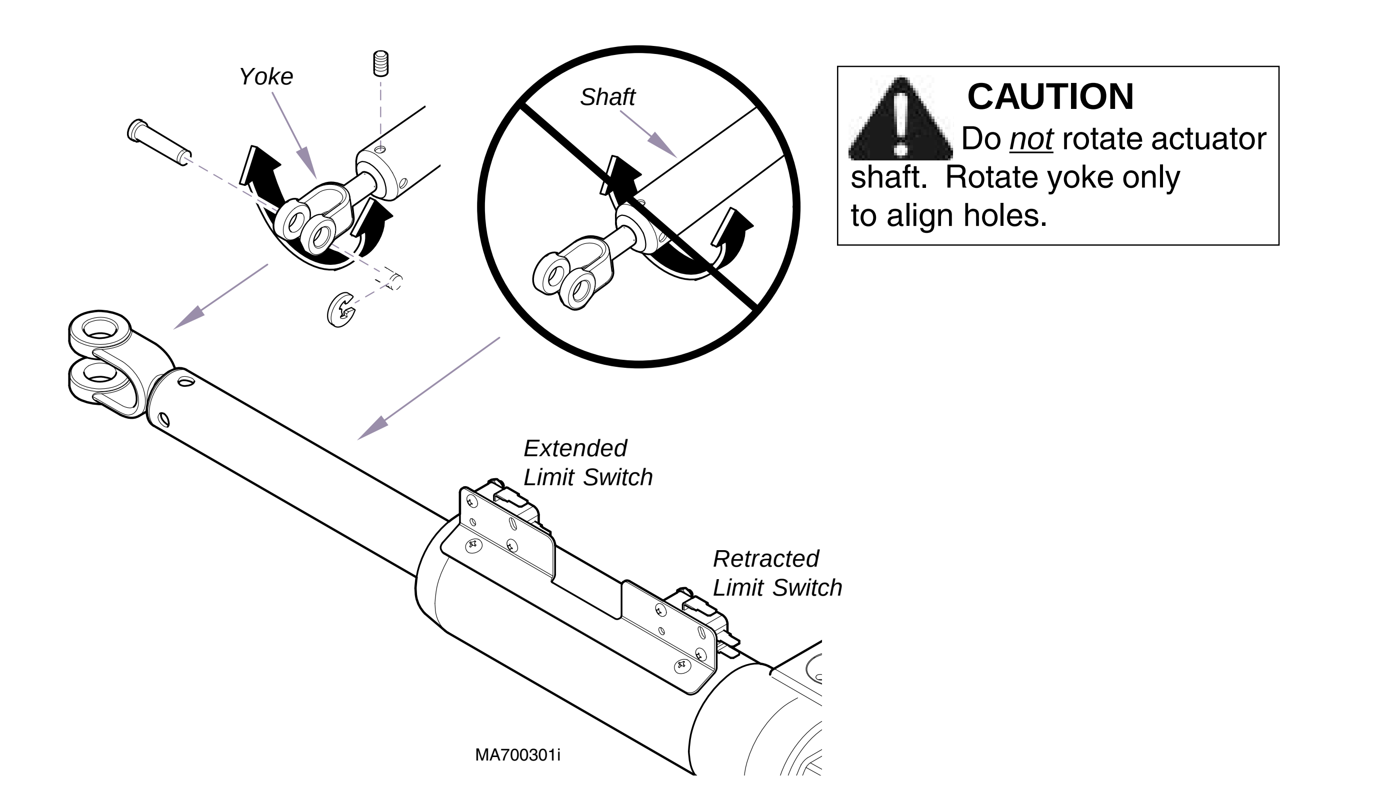

Figure 4-22. Back Actuator Assembly

4.18 Back Capacitor (Domestic Units Only)

A. Removal

(1) If possible, raise TILT UP function all the way up.

> **DANGER**
> **Always unplug the power cord from the wall outlet before making any repairs to prevent the possibility of electrical shock. Failure to comply could result in personal injury.**

(2) Unplug power cord from wall outlet.

(3) Using a screwdriver, pry tab of mounting bracket (1, Figure 4-23) outward and separate back capacitor (2) from mounting bracket.

(4) Remove capacitor cap (3) from back capacitor (2).

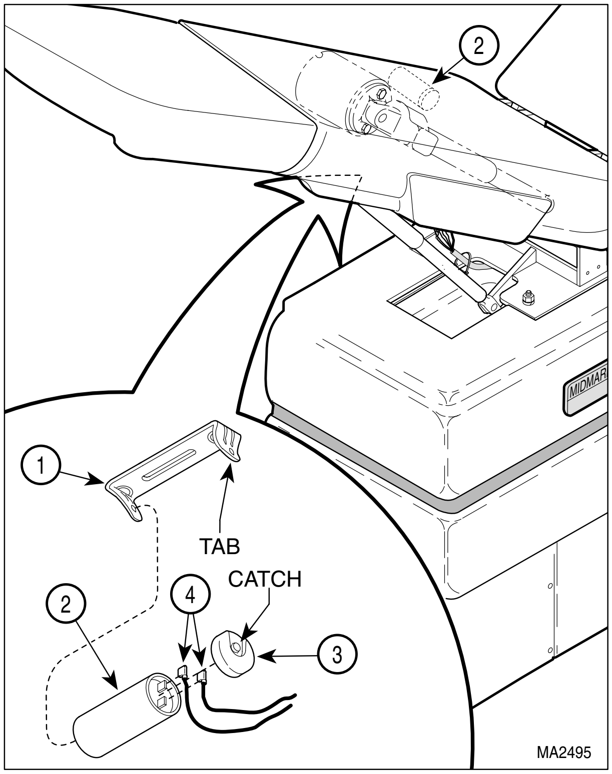

Figure 4-23. Back Capacitor

> **DANGER**
> **The capacitor contains stored electricity. Never touch terminals of capacitor, even if power has been disconnected. Always discharge capacitor before touching capacitor terminals or wires. Failure to comply could result in serious personal injury.**

(5) Discharge back capacitor (2).

(6) Disconnect two wires (4) from terminals of back capacitor (2) and remove back capacitor.

B. Installation

(1) Connect one wire (4) to each terminal group of back capacitor (2).

(2) Install capacitor cap (3) on back capacitor (2).

(3) Position the bottom of back capacitor (2) on mounting bracket (1) and then push the top of the capacitor inward. Using a screwdriver, force the tab of the mounting bracket (1) down over the catch of the capacitor cap (3). Make sure back capacitor (2) is held firmly in place.

(4) Plug power cord into wall outlet.

4.19 Arm Rest

A. Adjustment

(1) Raise BACK UP function all the way up.

> **DANGER**
> **Always unplug the power cord from the wall outlet before making any repairs to prevent the possibility of electrical shock. Failure to comply could result in personal injury.**

(2) Unplug power cord from wall outlet.

(3) Remove four screws (1, Figure 4-24) and back cover (2) from plastic back section (3).

> **NOTE**
> Units with Serial Numbers BP-1000 Thru BP-2655 have both locknuts (4 and 5). Units after BP-2655 have only locknut (5).

(4) Loosen locknuts (4 and 5) ***or*** locknut (5).

> **CAUTION**
> Make sure BACK UP function is all the way up when performing step 5, or adjustment will not be correct.

Return To Table Of Contents

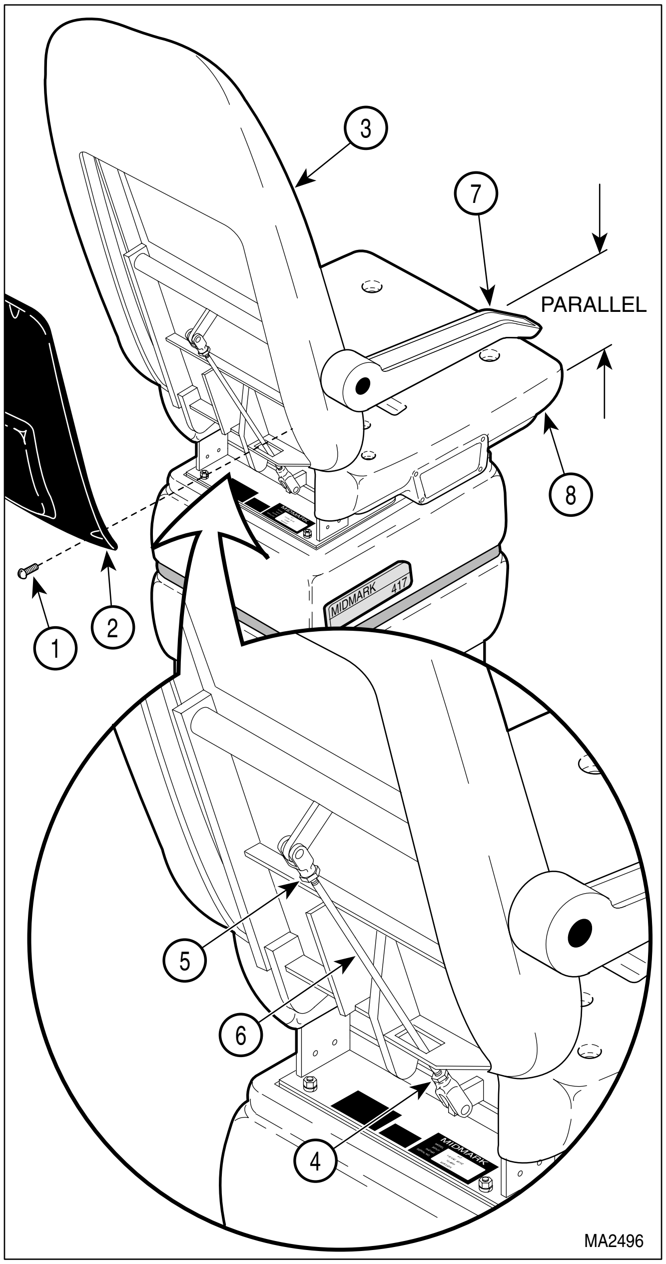

Figure 4-24. Arm Rest Adjustment

(5) Rotate arm rod (6) until flat underside of arm casting (7) is parallel with plastic seat section (8).

NOTE

Units with Serial Numbers BP-1000 Thru BP-2655 have both locknuts (4 and 5). Units after BP-2655 have only locknut (5).

(6) Tighten locknut (5) ***or*** two locknuts (4 and 5).

(7) Install back cover (2) on plastic back section (3) and secure with four screws (1).

(8) Plug power cord into wall receptacle.

4.20 Foot Extension Brake Lever

A. Adjustment

(1) Loosen jam nut (1, Figure 4-25).

(2) Adjust carriage bolt (2) until there is a 1/16 - 1/8 in (1.6 - 3.2 mm) gap between brake lever (3) and plastic foot section (4).

(3) Tighten jam nut (1).

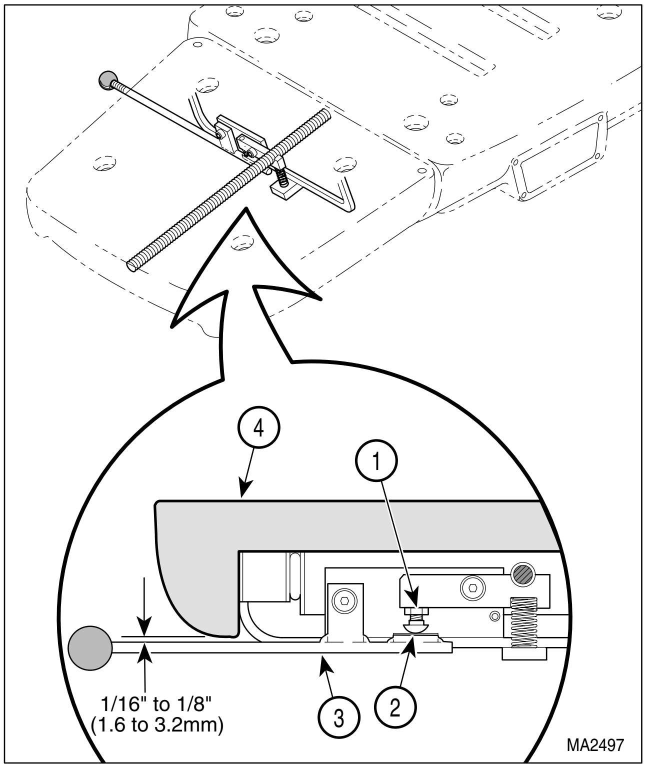

Figure 4-25. Foot Extension

4.21 Hand Control Panel Or Interface Board

A. Removal

(1) Disconnect coil cord (1, Figure 4-26) from hand control.

(2) Remove two screws (2) and top end cap (3) from hand control tube (4).

(3) Remove locating plate (5) from hand control tube (4).

CAUTION

Do not pull on ribbon connectors with excessive force or damage to hand control panel or interface board could result.

(4) Remove hand control panel (6) and interface board (7) as an assembly from hand control tube (4).

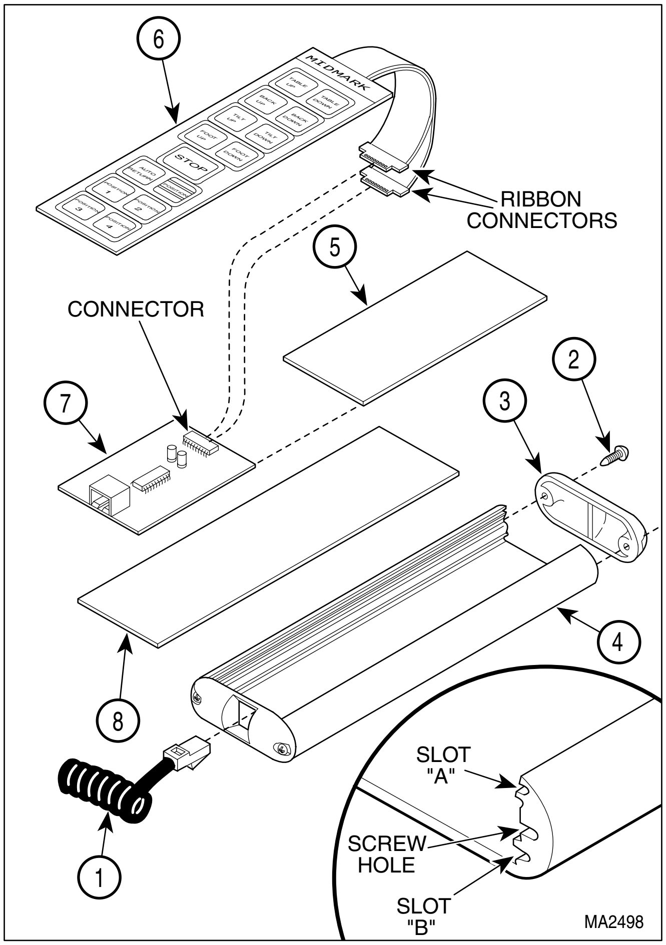

Figure 4-26. Hand Control Panel or Interface Board

(5) Disconnect ribbon connectors of hand control panel (6) from connector of interface board (7).

B. Installation

(1) Connect ribbon conectors of hand control panel (6) to connector of interface board (7).

(2) Make sure fishpaper (8) is in the bottom of the hand control tube (4).

(3) Simultaneously, slide hand control panel (6) into Slot A and interface board (7) into Slot B of hand control tube (4).

(4) Install locating plate (5) into Slot B of hand control tube (4).

(5) Install top end cap (3) on hand control tube (4) and secure with two screws (2).

(6) Connect coil cord (1) to hand control.

4.22 Typical Foot Pedal Foot Switch (New Style Foot Control)

A. Removal

(1) Unplug coil cord of foot control from chair.

(2) Remove two screws (1, Figure 4-27) and partially separate foot switch bracket (2) from foot control casting (3).

(3) Remove screw (4), spacer (5), and pedal (6) from foot switch bracket (2).

(4) Tag and disconnect two wires (7) from terminals of foot switch (8).

(5) Remove two nuts (9), washers (10), screws (11), and foot switch (8) from foot switch bracket (2).

B. Installation

(1) Install foot switch (8) on foot switch bracket (2) and secure with two screws (11), washers (10), and nuts (9).

(2) Connect one wire (7) to each terminal of foot switch (8).

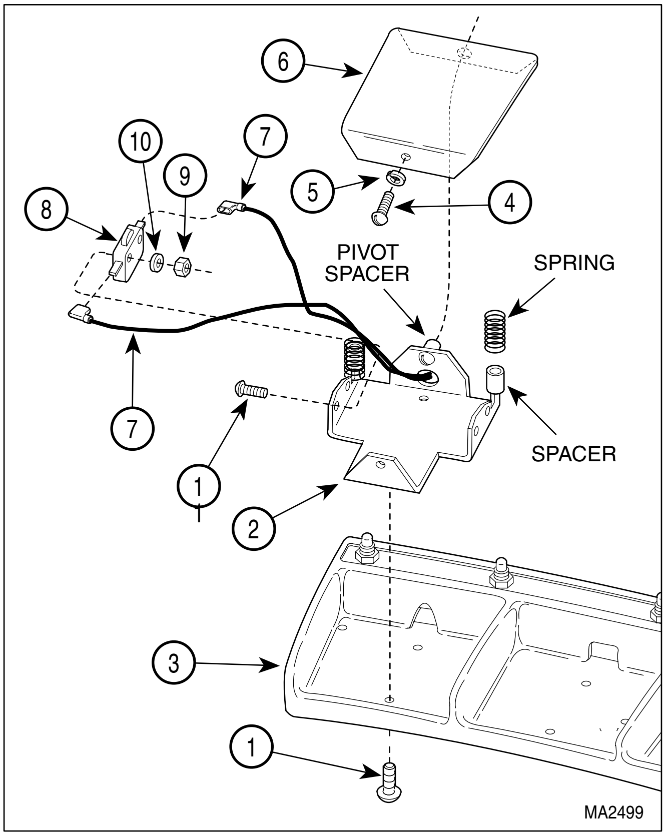

Figure 4-27. Typical Foot Switch (New Style)

Return To Table Of Contents

(3) Make sure springs and spacers are in position and have not fallen off.

(4) Install pedal (6) on foot switch bracket (2) and secure with spacer (5) and screw (4), making sure pedal is mounted on pivot spacer.

(5) Install foot switch bracket (2) on foot control

(6) Connect coil cord of foot control into chair.

4.23 Typical Foot Switch (New Style Foot Control)

A. Removal

(1) Disconnect coil cord of foot control from chair.

(2) Remove four screws (1, Figure 4-28), four glides (2), four screws (3), and wire channel cover (4) from foot control casting (5).

(3) Remove nut (6) and lockwasher (7) from foot switch (8).

(4) Partially remove foot switch (8) from foot control casting (5).

(5) Disconnect two wires (9) from terminals of foot switch (8) and remove foot switch.

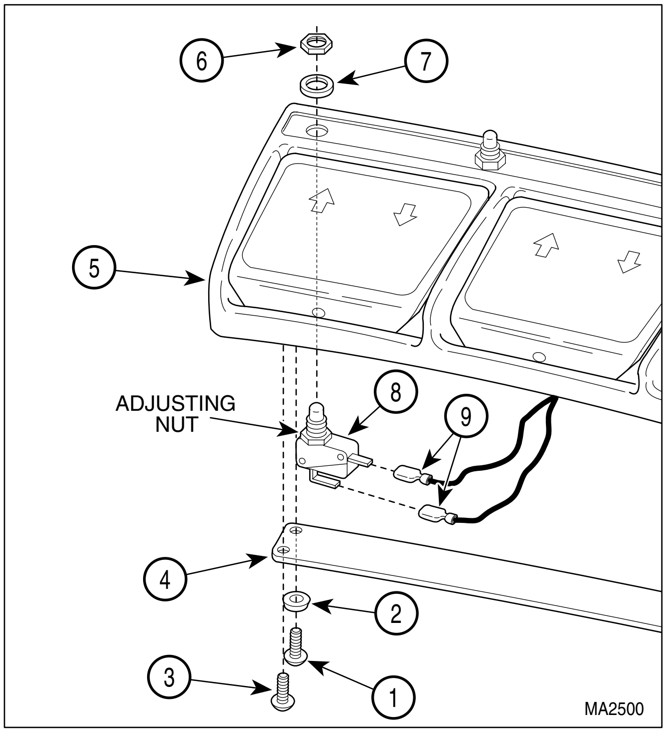

Figure 4-28 Typical Foot Switch

B. Installation

> **NOTE**
> One wire must be connected to the N.O. terminal of the foot switch and one wire must be connected to the COM. terminal of the foot switch.

(1) Connect two wires (9) to terminals of foot switch (8).

> **NOTE**
> Raise or lower adjusting nut so foot switch protrudes out top end of foot control casting just far enough so lockwasher and nut can be installed.

(2) Insert foot switch (8) into foot control casting (5) and secure with lockwasher (7) and nut (6).

(3) Install wire channel cover (4) on foot control casting (5) and secure with four screws (3), four glides (2), and four screws (1).

(4) Connect coil cord of foot control to chair.

4.24 Foot Control Interface Board (New Style Foot Control)

A. Removal

(1) Disconnect coil cord from foot control.

(2) Remove four screws (1, Figure 4-29), four glides (2), four screws (3), and wire channel cover (4) from foot control casting (5).

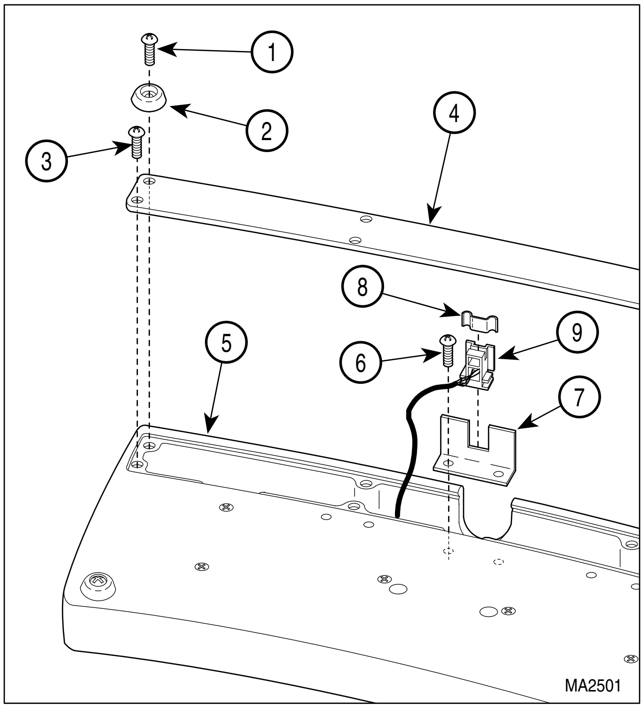

Figure 4-29 Foot Control Interface Board

(3) Remove two screws (6) and partially separate receptacle bracket (7) from foot control casting (5).

(4) Remove spring retaining clip (8) and receptacle (9) from receptacle bracket (7).

(5) Remove two screws (1, Figure 4-30) and partially separate foot switch bracket (2) from foot control casting (3).

(6) Remove screw (4), spacer (5), and pedal (6) from foot switch bracket (2).

(7) Remove two nuts (7), lockwashers (8), screws (9), lockwashers (10), standoffs (11), and interface board (12) from footswitch bracket (2).

(8) Disconnect connector (13) from terminal pins of interface board (12).

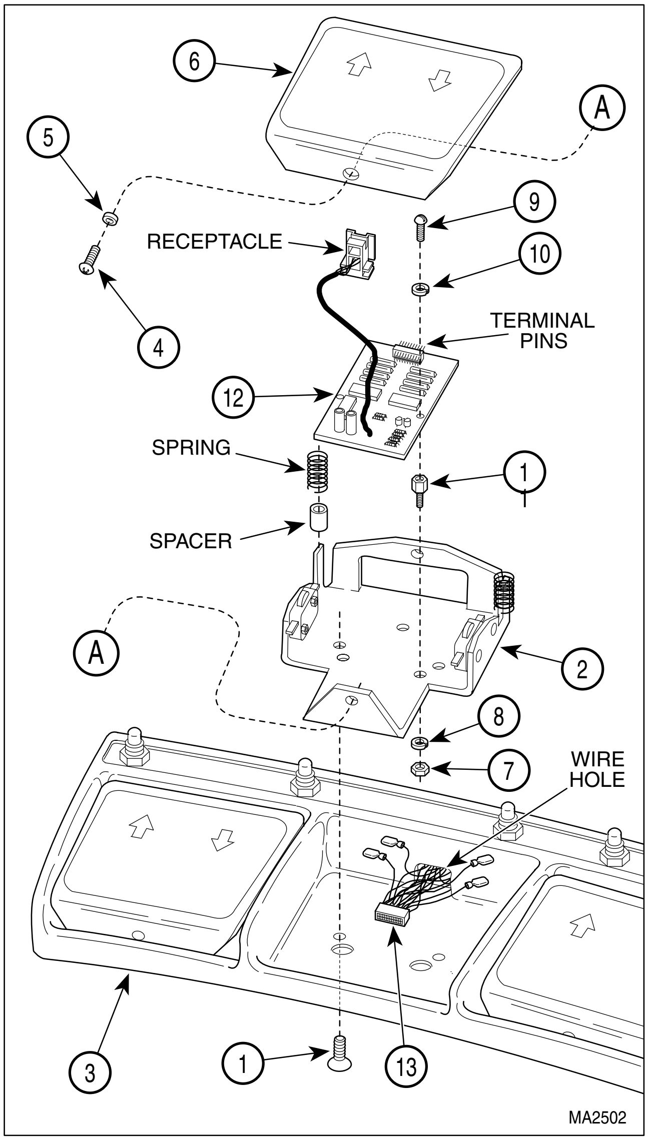

Figure 4-30. Foot Control Interface Board

B. Installation

> **NOTE**
> Components on interface board must be facing upward.

(1) Connect connector (13, Figure 4-30) to terminal pins of interface board (12).

(2) Feed receptacle of interface board (12) thru wire hole.

(3) Install interface board (12) on foot switch bracket (2) and secure with two standoffs (11), lockwashers (10), screws (9), lockwashers (8), and nuts (7).

(4) Make sure springs and spacers are in position and have not fallen off.

(5) Install pedal (6) on foot switch bracket (2) and secure with spacer (5) and screw (4), making sure pedal is mounted on pivot spacer.

(6) Install foot switch bracket (2) on foot control casting (3) and secure with two screws (1).

(7) Install receptacle (9, Figure 4-29) on receptacle bracket (7) and secure by inserting retaining clip (8) in slot of receptacle.

(8) Install receptacle bracket (7) on foot control casting (5) and secure with two screws (6).

(9) Install wire channel cover (4) on foot control casting (5) and secure with four screws (3), four glides (2), and four screws (1).

(10) Connect coil cord of foot control into chair.

4.25 Plastic Foot Section

A. Removal

(1) Remove upholstered foot section (1, Figure 4-31) from plastic foot section (2).

(2) Remove four nuts (3), washers (4), and plastic foot section (2) from foot section weldment (5).

B. Installation

(1) Install plastic foot section (2) on foot section weldment (5) and secure with four washers (4) and nuts (3). Tighten nuts until firm; then tighten an additional 1/3 turn.

(2) Making sure velcro strips are aligned, install upholstered foot section (1) on plastic foot section (2).

Return To Table Of Contents

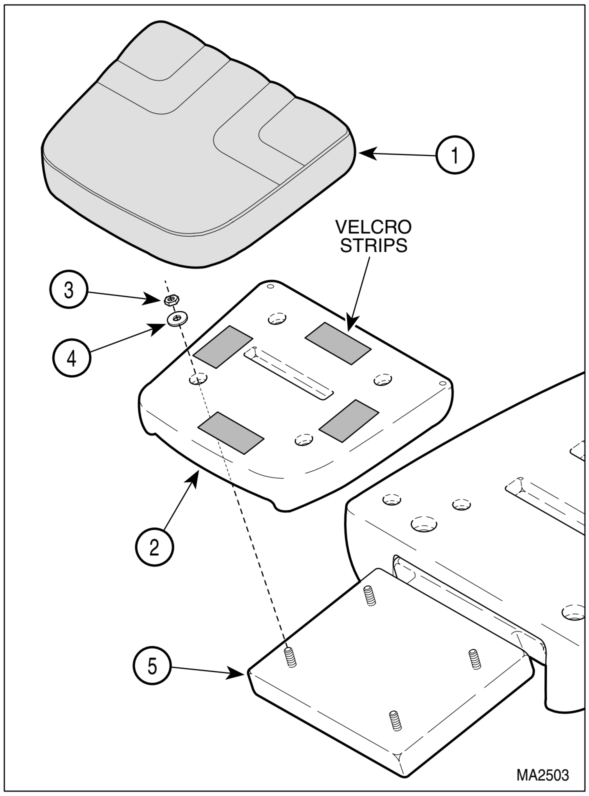

Figure 4-31. Plastic Foot Section

4.26 Plastic Back Section

A. Removal

(1) Raise TABLE UP and BACK UP functions all the way up.

> **DANGER**
> **Always unplug the power cord from the wall outlet before making any repairs to prevent the possibility of electrical shock. Failure to comply could result in personal injury.**

(2) Unplug power cord from wall receptacle.

(3) Remove upholstered back section (1, Figure 4-32) from plastic back section (2).

(4) Remove four screws (3) and back cover (4) from plastic back section (2).

(5) While supporting arm castings (5), remove cotter pin (6), clevis pin (7), and disconnect clevis (8) from arm tube weldment (9). Lower arm castings.

(6) Rotate arm tube weldment (9) downward as far as it will go, so a punch can be inserted thru access hole in arm tube weldment.

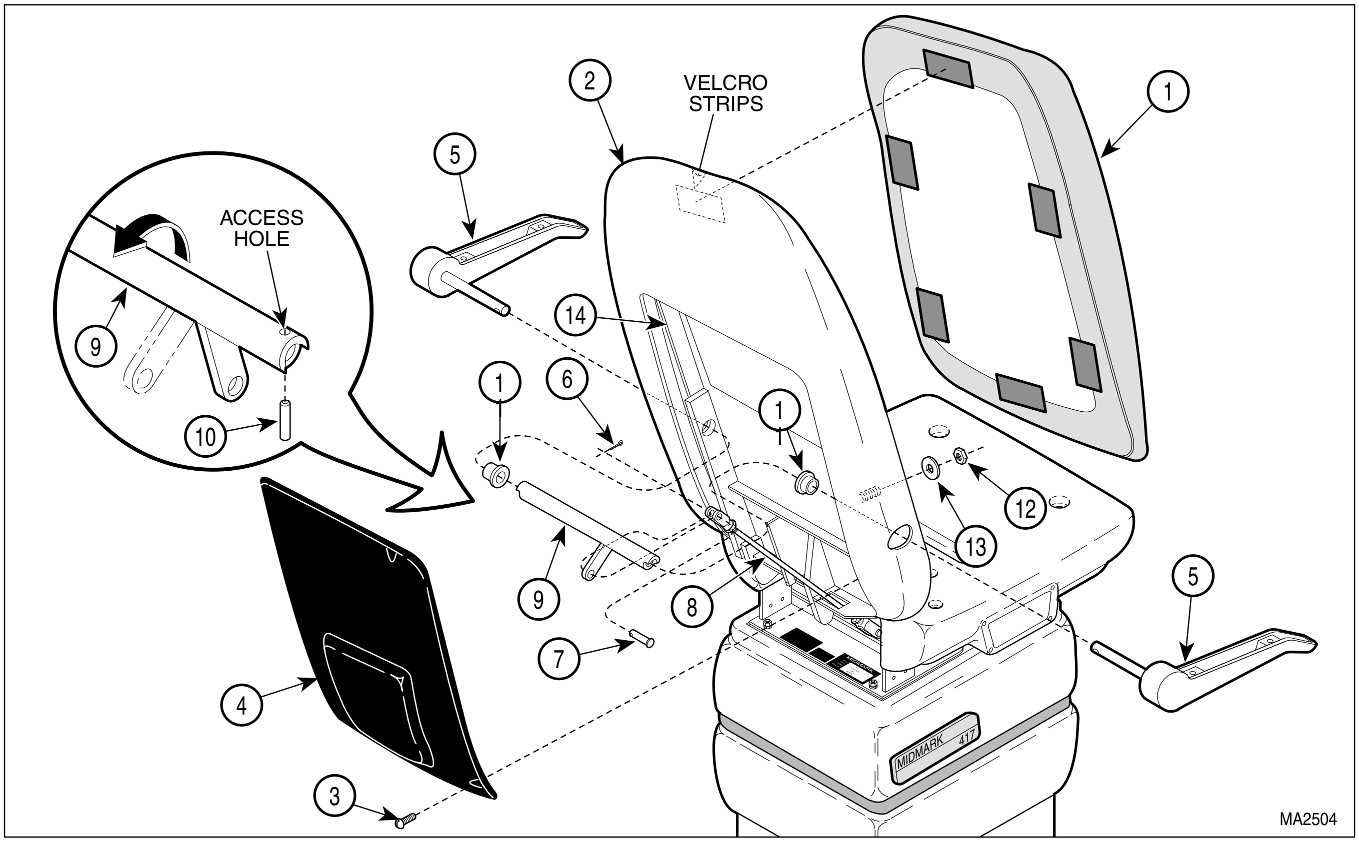

Figure 4-32. Plastic Back Section

Return To Table Of Contents

(7) Raise or lower arm casting (5) slightly, until punch is aligned with groove pin (10); then drive groove pin out of arm tube weldment (9).

(8) Repeat step 7 for other arm casting (5).

(9) Remove two arm castings (5), arm tube weldment (9), and two flanged bearings (11).

(10) Remove four nuts (12), washers (13), and plastic back section (2) from back weldment (14).

B. Installation

> **NOTE**
> The screws which hold the base capacitor clamp on the back weldment may stick out and prevent plastic back section from mounting flush. If this is the case, loosen the screws until the plastic back section has been installed and then retighten the screws.

(1) Install plastic back section (2) on back weldment (14) and secure with four washers (13), and four nuts (12). Tighten nuts until firm; then tighten an additional 1/3 turn.

(2) Install one flanged bearing (11) in each side of back weldment (14).

(3) Install arm tube weldment (9) and arm castings (5) on back weldment (14).

(4) Install one groove pin (10) in each end of arm tube weldment (9), making sure knurled end of groove pin is inserted into arm tube weldment first.

(5) Connect clevis (8) to arm tube weldment (9) with clevis pin (7) and cotter pin (6). Bend end of cotter pin over.

(6) Adjust arm castings (5) height if necessary (Refer to para 4.19).

(7) Install back cover (4) on plastic back section (2) and secure with four screws (3).

(8) Making sure velcro strips are aligned, install upholstered back section (1) on plastic back section (2).

(9) Plug powercord into wall receptacle.

4.27 Plastic Seat Section

A. Removal

> **DANGER**
> **Always unplug the power cord from the wall outlet before making any repairs to prevent the possibility of electrical shock. Failure to comply could result in personal injury.**

(1) Unplug power cord from wall receptacle.

(2) Remove a hand control plug-in port from each side of chair (Refer to para 4.7).

(3) Remove control disable switch (Refer to para 4.6).

(4) Remove upholstered seat section (1, Figure 4-33) from plastic seat section.

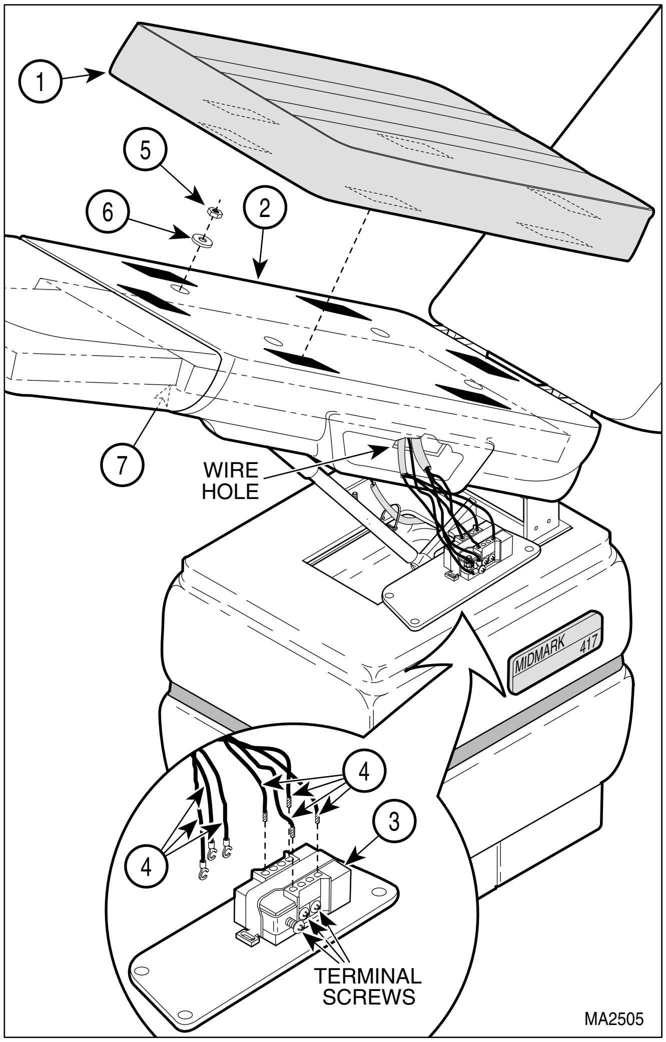

Figure 4-33. Plastic Seat Section

NOTE
The left side of the chair has seven wires to disconnect; the right side has six wires to disconnect.

(5) Loosen terminal screws of electrical receptacles (3); then tag and disconnect six / seven wires (4) from each electrical receptacle and remove receptacles.

(6) Pull wires thru wire holes on each side of plastic seat section (2) and into center of chair.

(7) Remove four nuts (5), washers (6), and plastic seat section (2) from seat weldment (7).

B. Installation

(1) Install plastic seat section (2) on seat weldment (7) and secure with four washers (6) and nuts (5). Tighten nuts until firm; then tighten an additional $^{1}/_{3}$ turn.

(2) Feed wires thru wire holes on each side of plastic seat section (2).

NOTE
The left side of the chair has seven wires to connect; the right side of the chair has six wires to connect.

(3) Connect six/seven wires (4) to terminals of electrical receptacles (3) and secure by tightening terminal screws.

(4) Making sure velcro strips are aligned, install upholstered foot section (1) on plastic foot section (2).

(5) Install control disable switch (Refer to para 4.6).

(6) Install hand control plug-in port on each side of chair (Refer to para 4.7).

(7) Plug power cord into wall receptacle.

4.28 Base Up Limit Switch

A. Removal

(1) If possible, raise base function all the way up.

DANGER
Always unplug the power cord from the wall outlet before making any repairs to prevent the possibility of electrical shock. Failure to comply could result in personal injury.

(2) Unplug power cord from wall receptacle.

(3) Raise up outer shroud (1, Figure 4-34) and use a support to hold it there.

(4) Disconnect two wires (2) from base up limit switch (3).

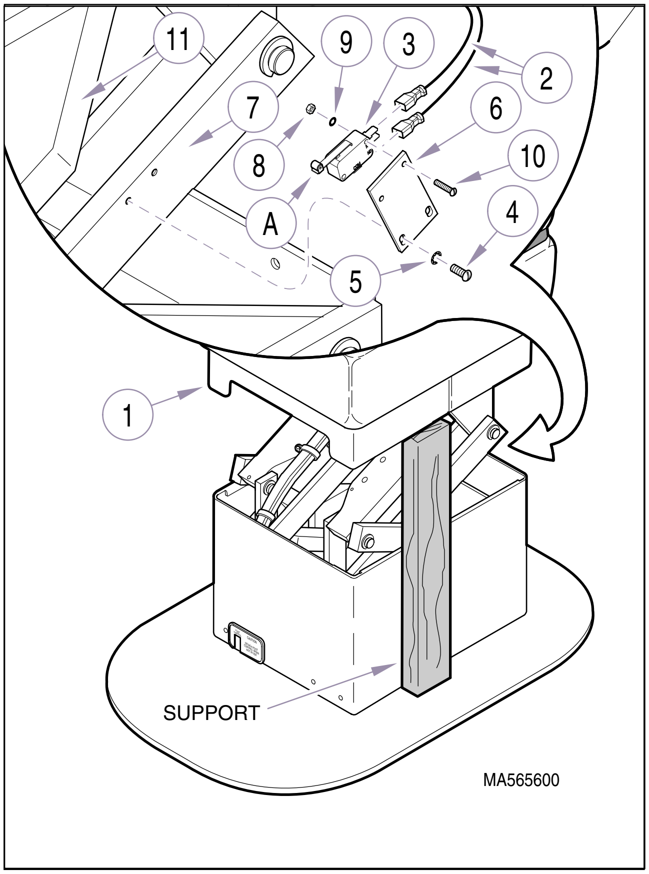

Figure 4-34. Base Up Limit Switch

NOTE
If two screws (4) cannot be removed using an offset screwdriver, the table top and shrouds must be removed (Refer to paras 4.3 and 4.4).

(5) Using an offset screwdiver, remove two screws (4), lockwashers (5), and switch mount (6) from column arm (7).

(6) Remove two nuts (8), lockwashers (9), limit switch (3), and two screws (10) from switch mount (6).

B. Installation

(1) Install limit switch (3, Figure 4-34) on switch mount (6) and secure with two screws (10), lockwashers (9), and two nuts (8).

(2) Install switch mount (6) on column arm (7) and secure with two lockwashers (5) and screws (4). Do not tighten screws (4) at this time.

(3) Connect two wires (2) to base up limit switch (3).

C. Adjustment

(1) If not already done, perform steps 1 thru 3 of Removal to gain access to limit switch.

(2) Raise base up function all the way up, then lower base down approximately 1/8 to 1/4 in. (3.2 to 6.35 cm).

(3) Using an offset screwdriver, loosen two screws (4); then slide switch mount (6, Figure 4-34) upward until trip arm (A) of limit switch "just" trips against upper plate (11). Secure switch mount in this position by tightening two screws (4).

(4) Check limit switch adjustment by running base down function all the way down and then base up function all the way up, making sure base up limit switch trips, stopping the base up function, before the base actuator begins to "freewheel".

(5) Remove support and lower outer shroud (1) down.

(6) Plug power cord into wall receptacle.

4.29 Foot Extension

A. Removal

(1) Raise TILT UP function all the way up and extend foot section.

DANGER

Always unplug the power cord from the wall outlet before making any repairs to prevent the possibility of electrical shock. Failure to comply could result in personal injury.

(2) Unplug power cord from wall receptacle.

(3) Remove plastic foot section (Refer to Para 4.16).

NOTE
If installed, loosen knobs and remove debris tray.

NOTE
Hold down brake release handle when removing brake shaft (1, Fig. 4-35), then, slowly release handle and remove brake lever spring (2).

(4) Remove threaded brake shaft (1, Fig. 4-35) by removing the two outer nuts and backing off the two inside nuts approximately 1/2" (1.3 cm).

(5) Remove brake lever spring (2).

(6) Remove shoulder bolt (3) and threaded brake lever (4).

(7) Remove shoulder bolt (5) and brake release handle (6).

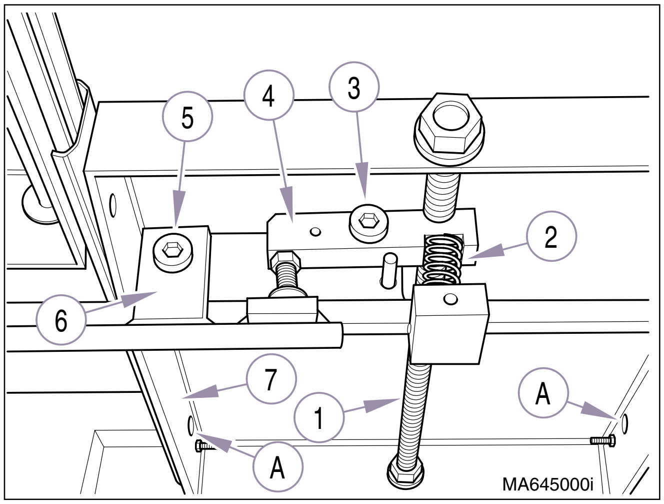

Figure 4-35. Foot Extension

NOTE
Use a *right-angled* drill and a 1/8" bit to drill out pop rivets. The two rear pop rivets must be accessed thru holes (A) in Foot section weldment (7).

(8) Drill out the six pop rivets that hold slides to foot section weldment (7) and remove the foot section (7).

(9) Remove the nuts and lockwashers (1, Fig. 4-36) that secure the slides to the seat weldment (2) and remove the slides and the foot section weldment .

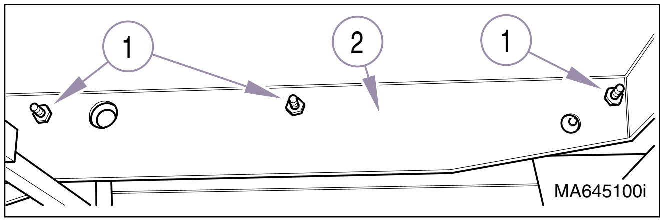

Figure 4-36. Foot Extension

B. Installation

(1) Install the foot slides onto the seat weldment (3, Figure 4-36) and secure with the lockwashers (2) and nuts (1).

NOTE
An extension will be required on the pop riveter head in order to install the pop rivets.

(2) Extend the slides (1, Fig. 37), position the foot section (2), align the holes, and secure with 3/16" pop rivets (3).

NOTE
Place a non-permanent thread-lock on the shoulder bolts before installing.

Return To Table Of Contents

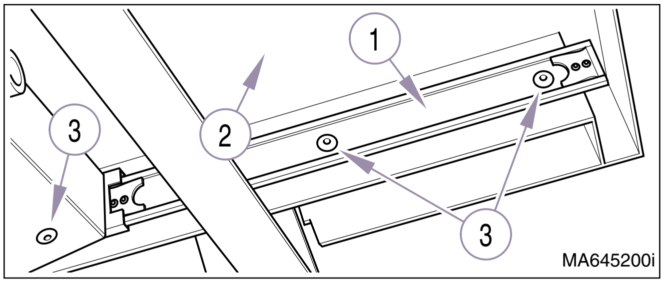

Figure 4-37. Foot Extension

(3) Install the brake lever (1, Figure 4-38) and secure with should bolt (2).

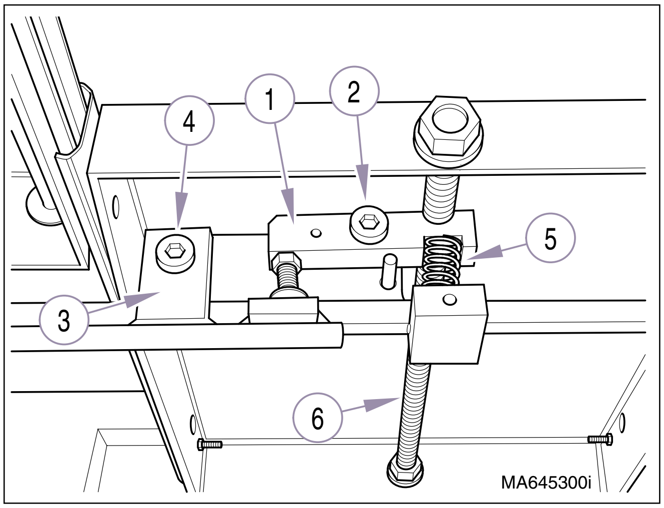

Figure 4-38. Foot Extension

(4) Install brake release handle (3) and secure with shoulder bolt (4).

(5) Install brake lever spring (5).

NOTE
Depress brake release when installing threaded brake shaft (6).

(6) Install threaded brake shaft (6), securing with four nuts and washers.

(7) Adjust Brake Lever. Refer to para. 4.14.

(8) Install plastic foot section. Refer to para. 4.16.

Return To Table Of Contents

SECTION V
SCHEMATICS AND DIAGRAMS

5.1 Electrical Schematics / Wiring Diagrams

Figures 5-1 thru 5-4 illustrate the logic/current flow and wiring connections between the electrical components in the table. Record serial number of table being worked on in order to determine which electrical schematic or wiring diagram to use.

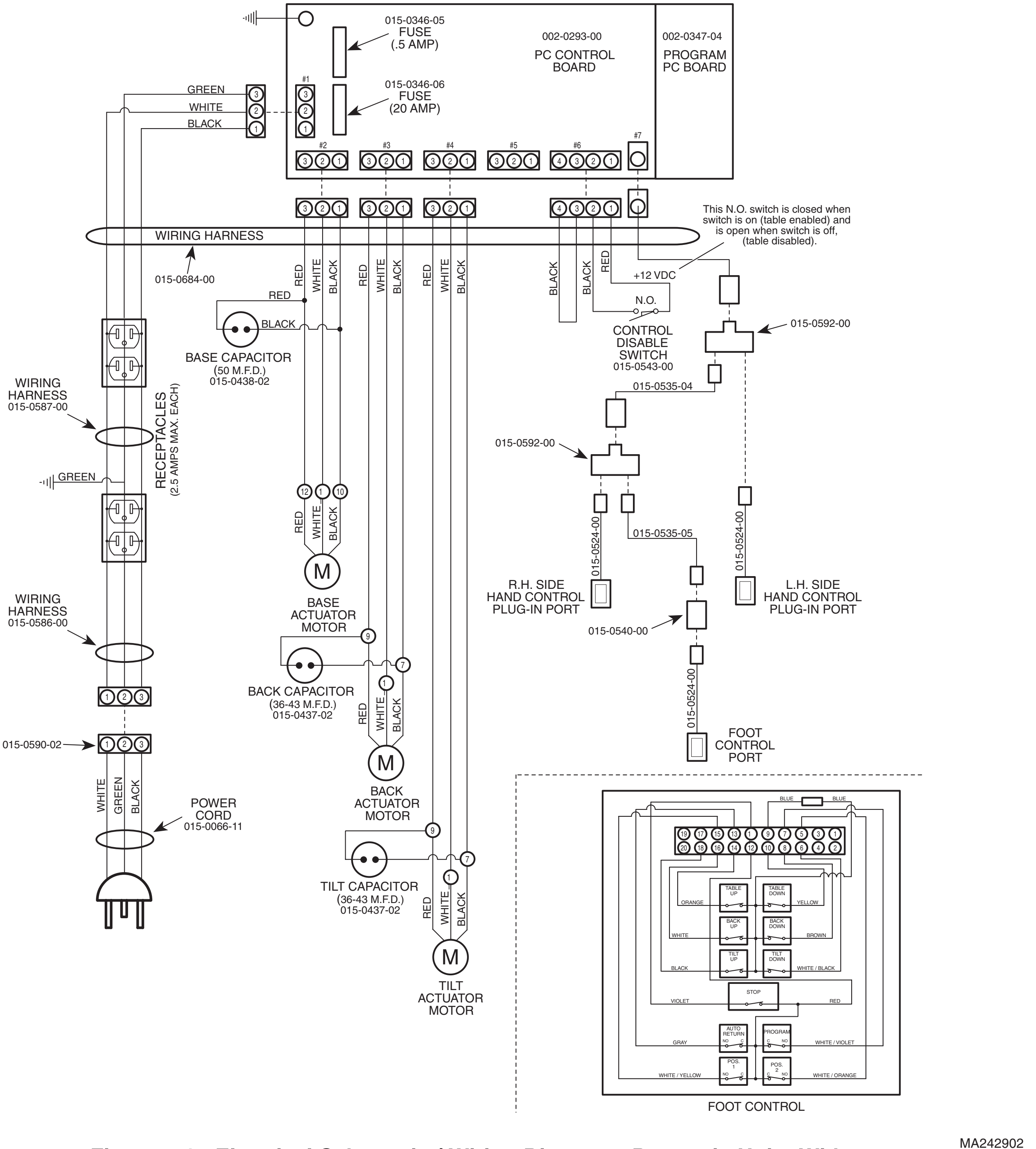

Figure 5-1. Electrical Schematic / Wiring Diagram - Domestic Units With Serial Numbers BP-1000 Thru BP-1363

Return To Table Of Contents

SECTION V
SCHEMATICS AND DIAGRAMS

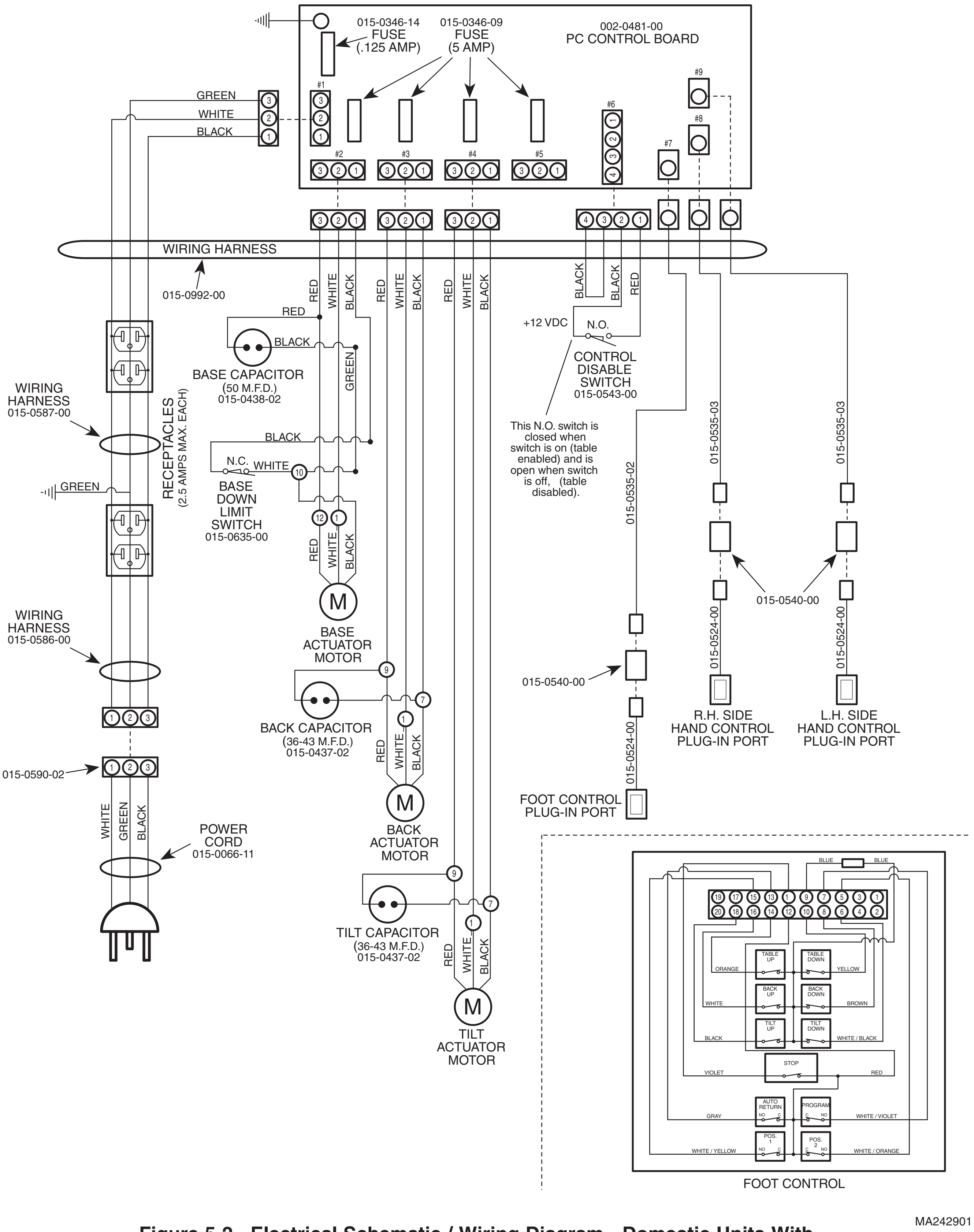

Figure 5-2. Electrical Schematic / Wiring Diagram - Domestic Units With Serial Numbers BP-1364 Thru BP-3337

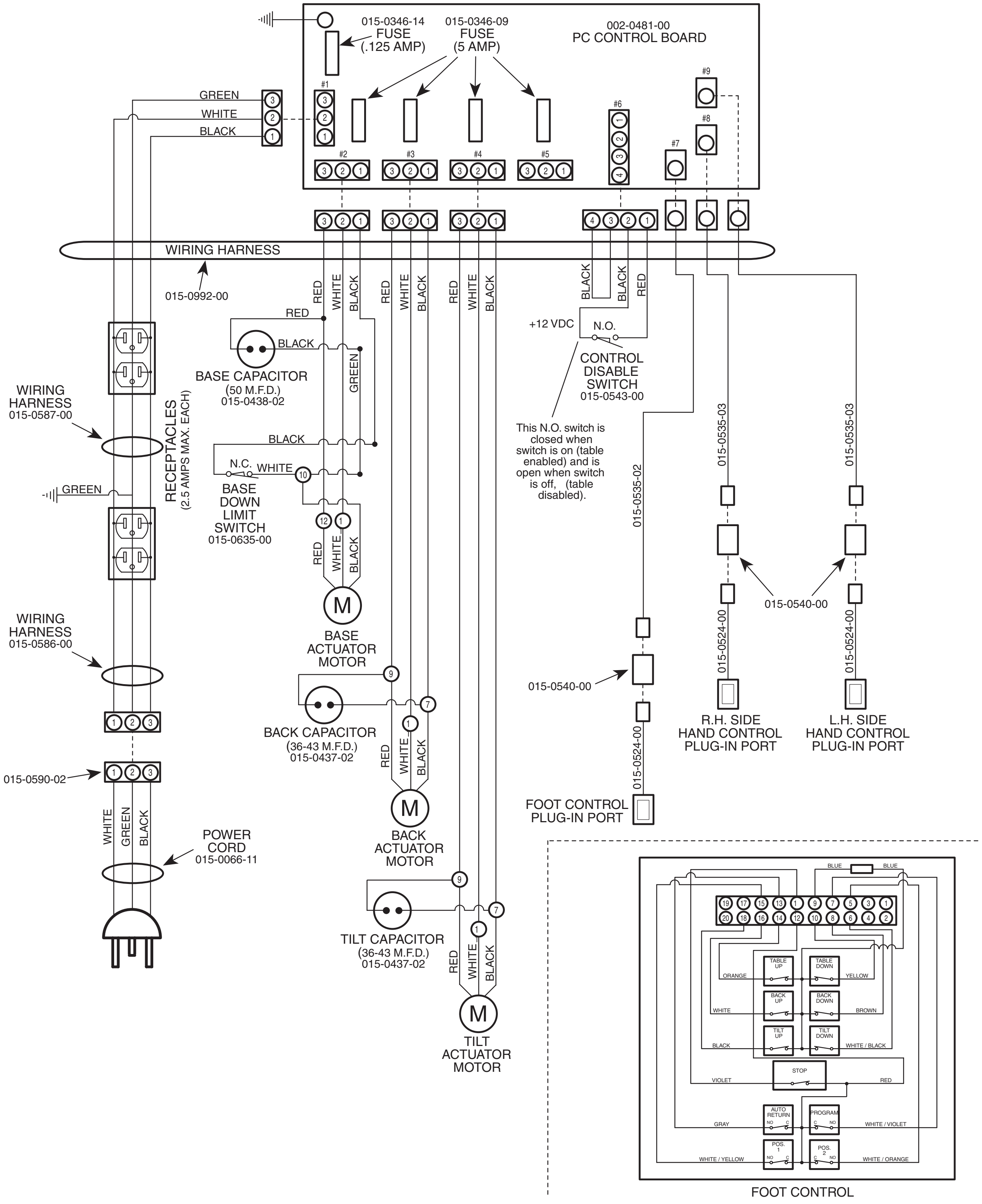

MA242901

Figure 5-3. Electrical Schematic / Wiring Diagram - Domestic Units With Serial Numbers BP3338 thru BP6130 & BP6132 thru BP6171

Return To Table Of Contents

SECTION V
SCHEMATICS AND DIAGRAMS

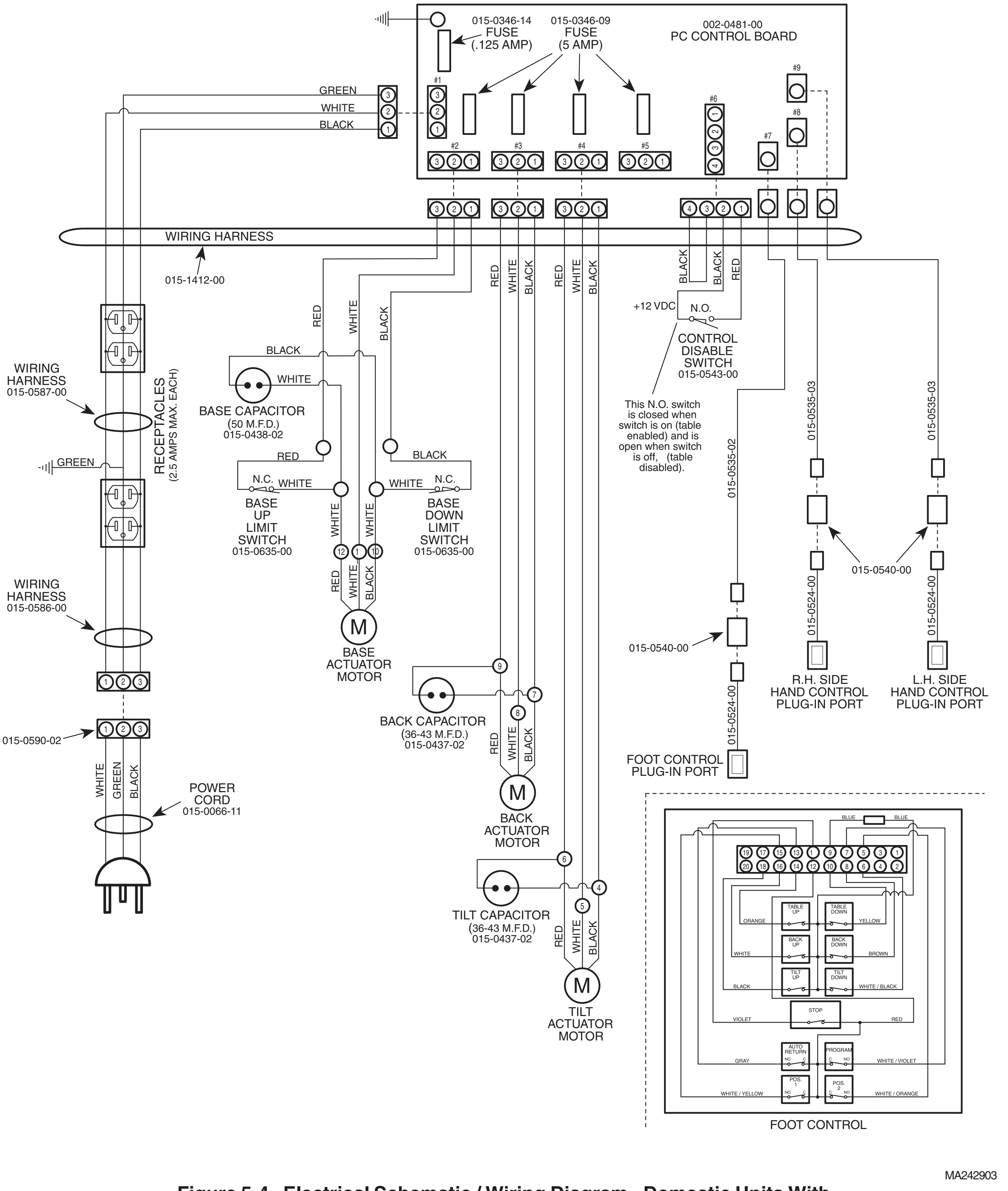

Figure 5-4. Electrical Schematic / Wiring Diagram - Domestic Units With Serial Numbers BP6131 and BP6172 thru BP7667

Return To Table Of Contents

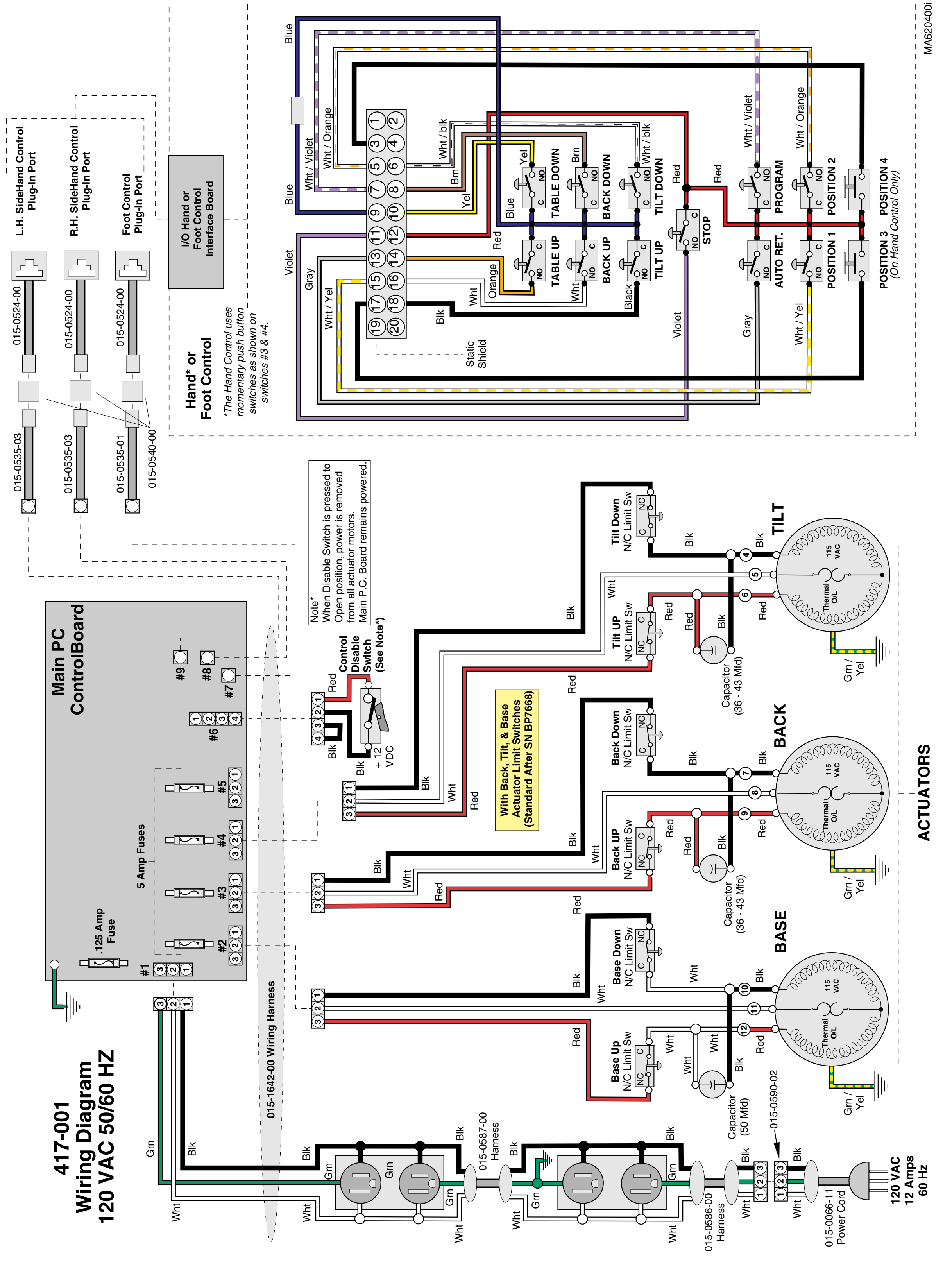

Figure 5-4. Electrical Schematic / Wiring Diagram - Domestic Units With Serial Numbers BP7668 thru Present, & V2200 thru V409498

Return To Table Of Contents

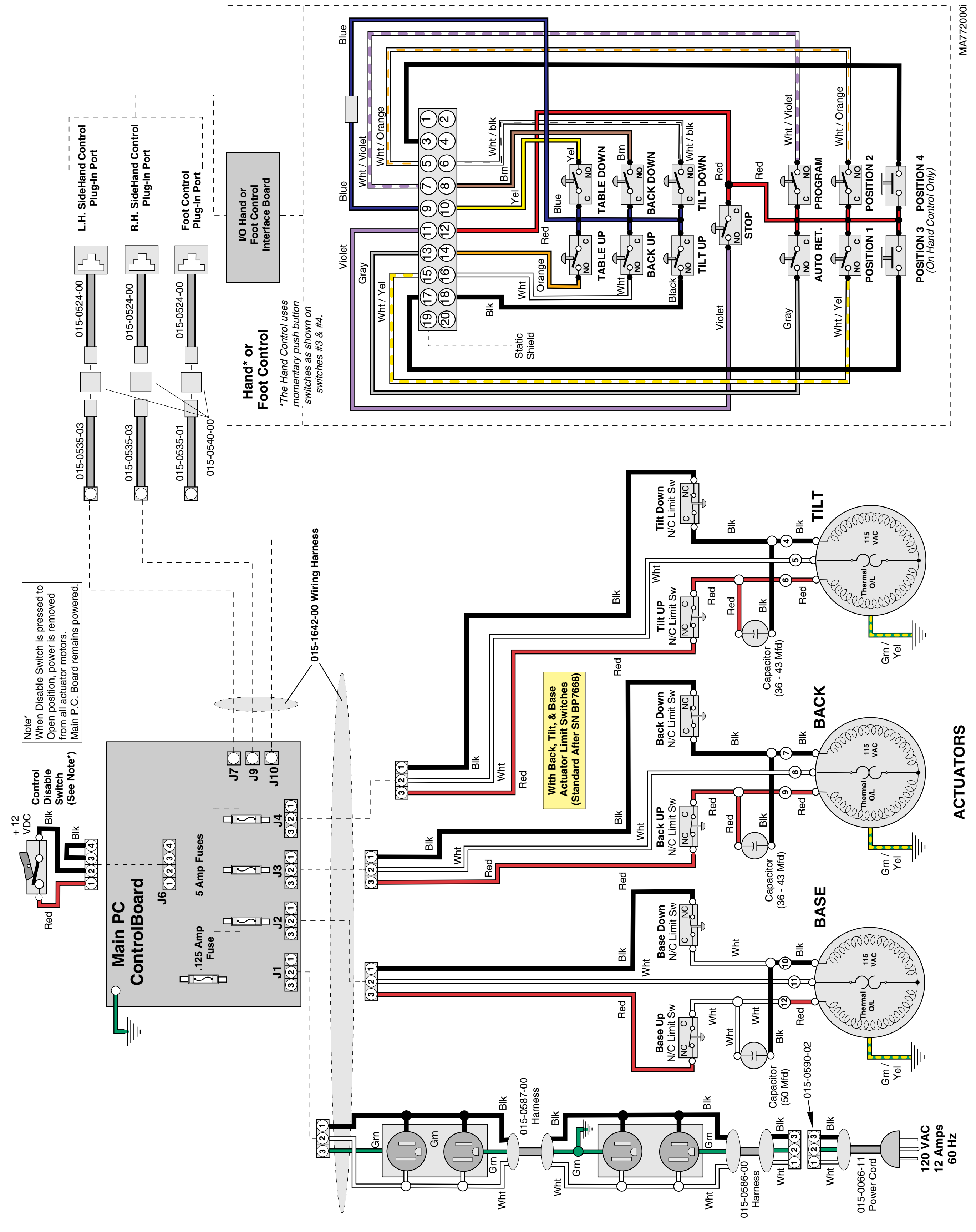

Figure 5-5. Electrical Schematic / Wiring Diagram - Domestic Units With Serial Numbers V409499 thru Present

Return To Table Of Contents

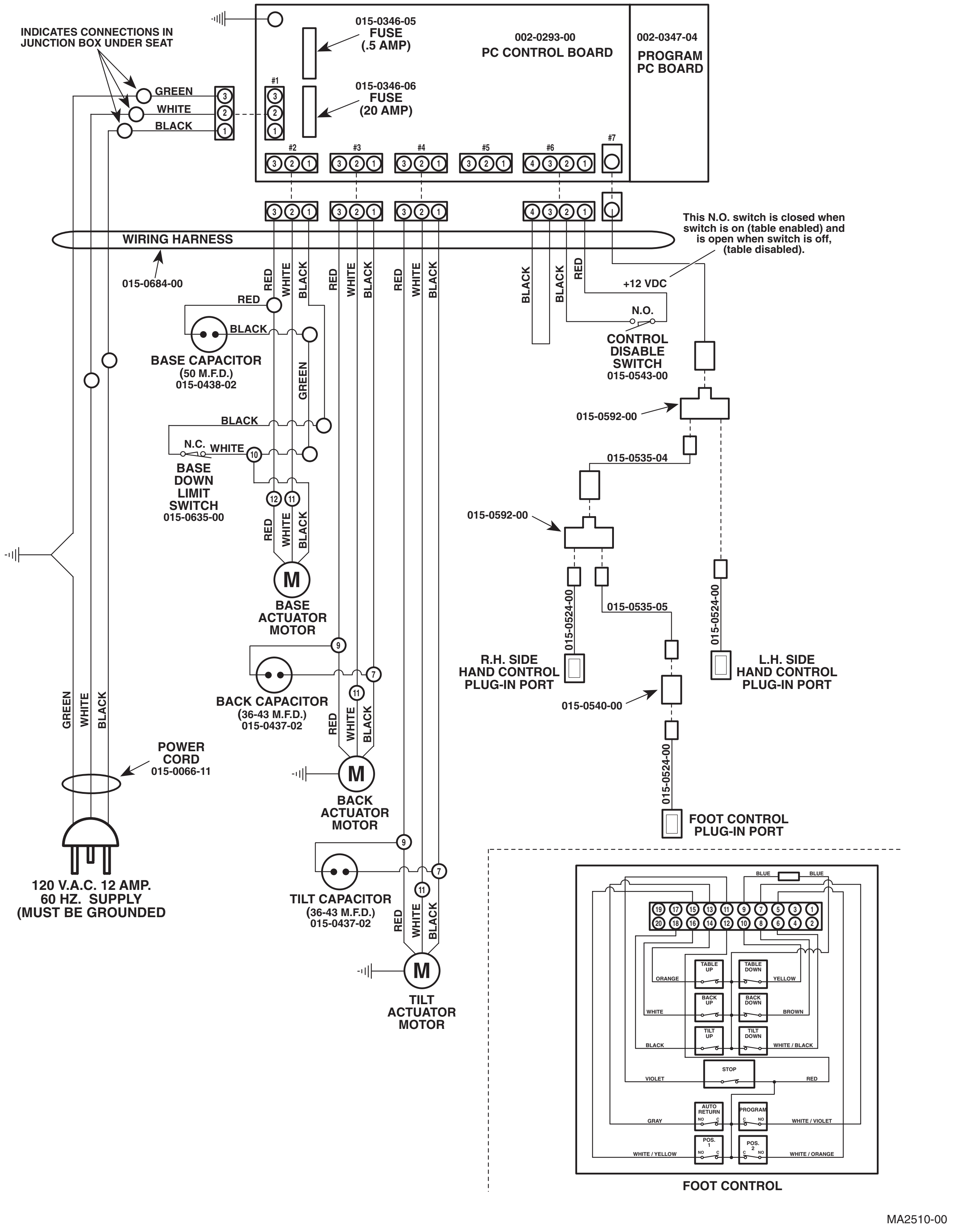

Figure 5-6. Electrical Schematic / Wiring Diagram - Canadian Units With Serial Numbers EP-1000 Thru EP-1014

Return To Table Of Contents

SECTION V
SCHEMATICS AND DIAGRAMS

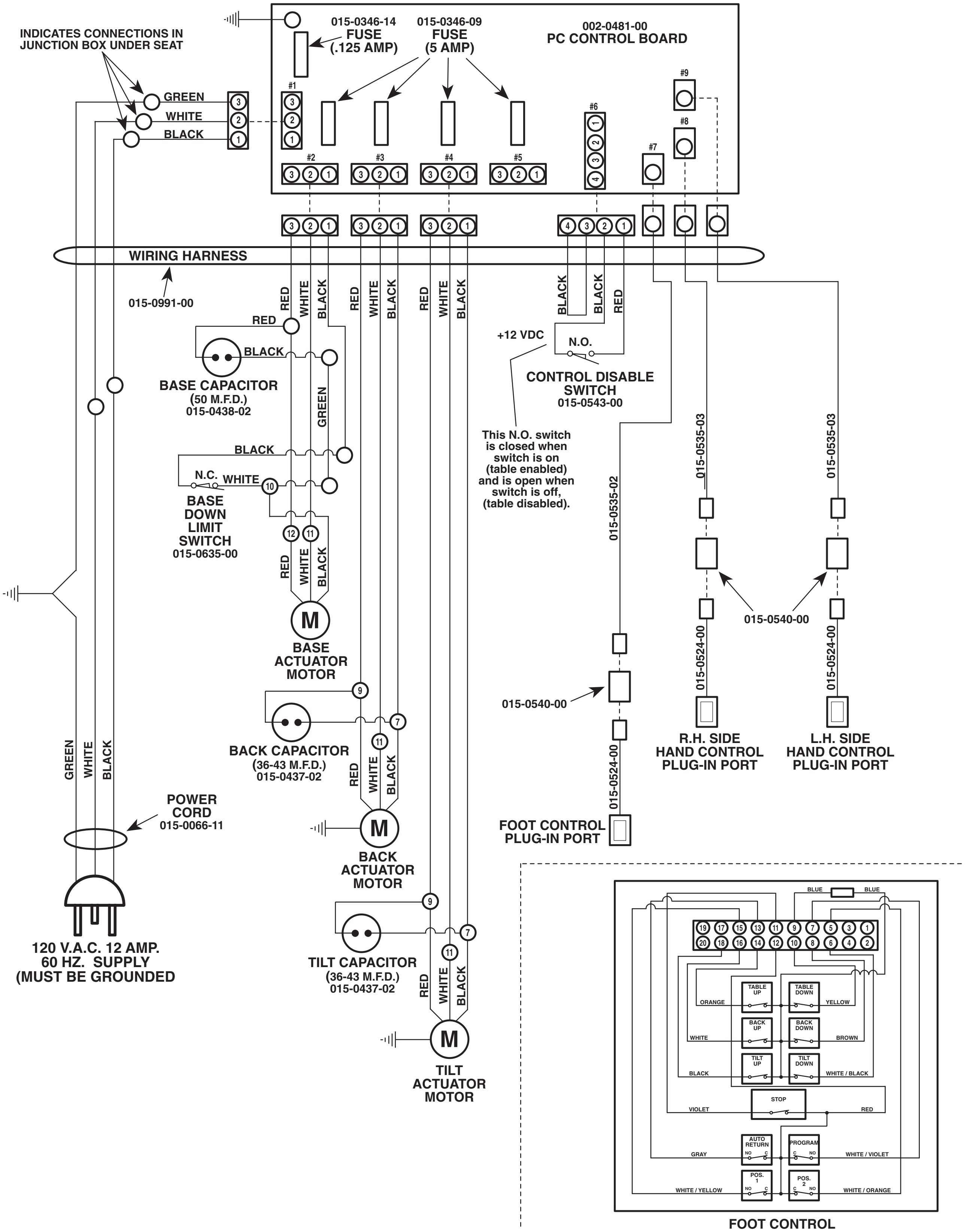

MA251001

Figure 5-7. Electrical Schematic / Wiring Diagram - Canadian Units With Serial Numbers EP1015 Thru EP1078

Return To Table Of Contents

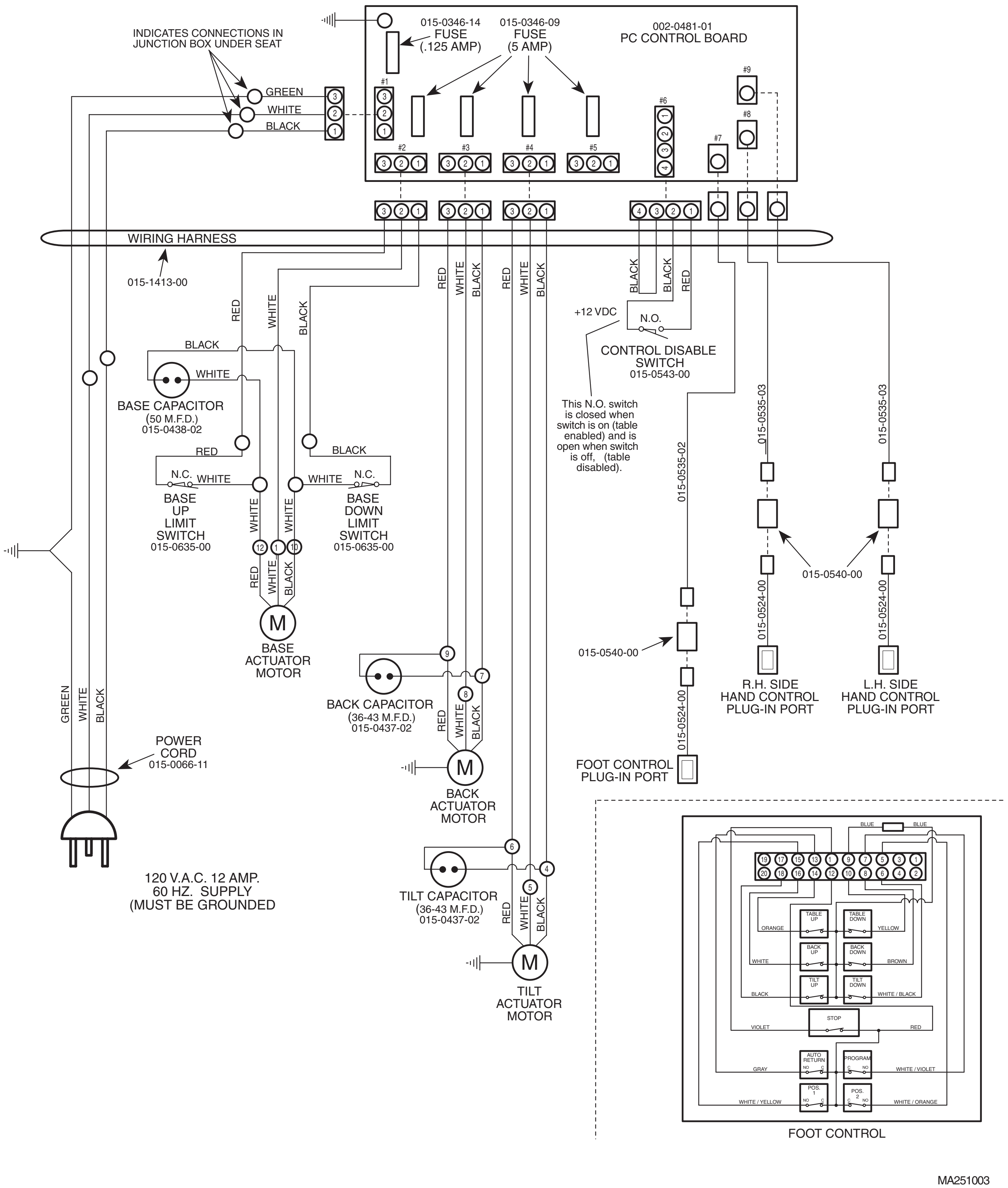

Figure 5-8. Electrical Schematic / Wiring Diagram - Canadian Units With Serial Numbers EP-1079 Thru Present, & V2200 thru V409498

Return To Table Of Contents

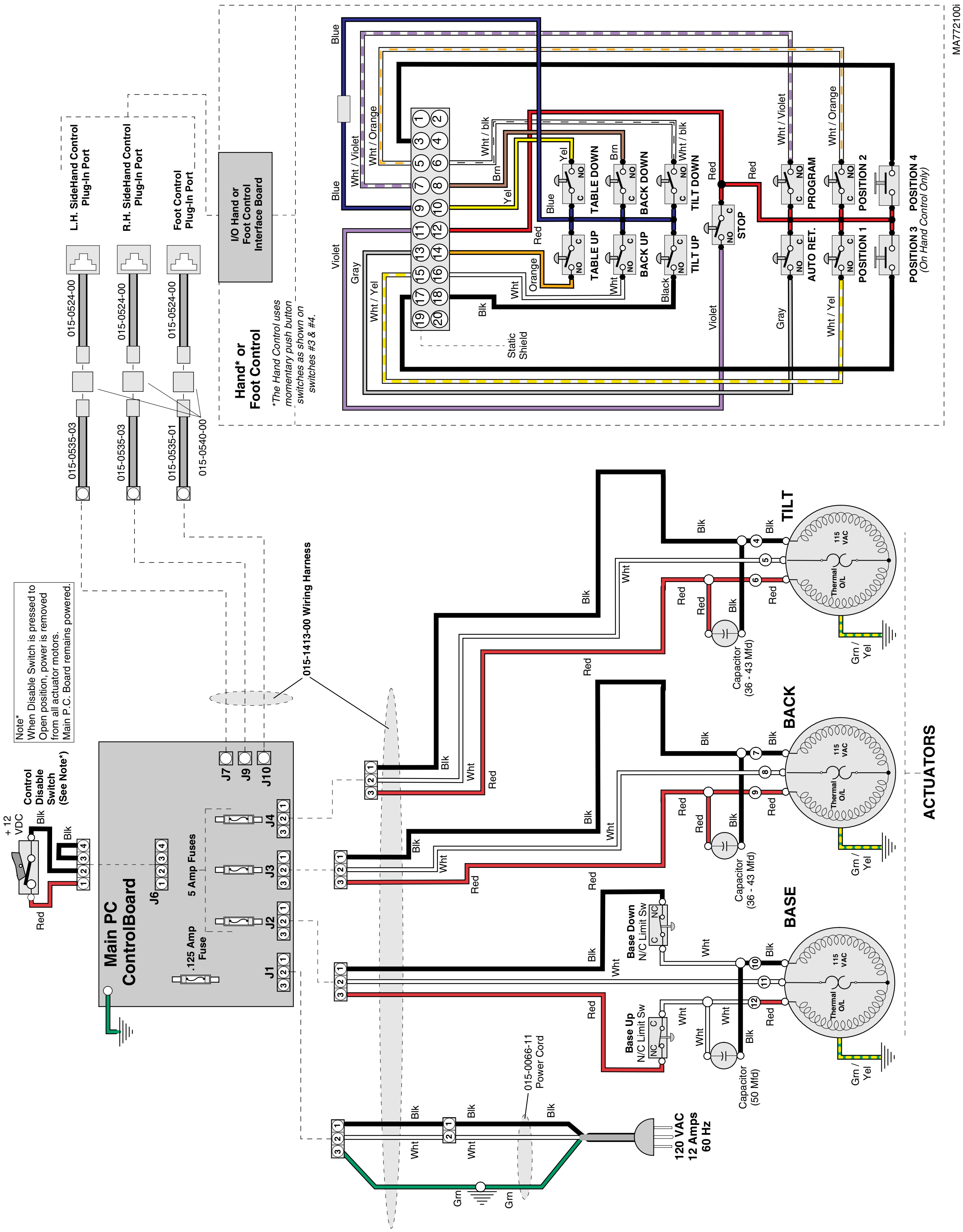

Figure 5-9. Electrical Schematic / Wiring Diagram - Canadian Units With Serial Numbers V409499 thru Present

5.2 Audible Signal Guide Chart

Table 5-1 lists all of the audible signals that can be emitted by the chair and the purpose/meaning for each audible signal. Refer to the Theory of Operation section (para 1.3B) to learn how to enable/disable the audible sounds.

Table 5-1. Audible Signal Guide Chart

Audible Signal	Purpose of Audible Signal
Short single beep	When the operator is initiating a reinitialization of the PC control board using the hand control, a short single beep informs the operator that the three buttons have been depressed for the required time.
	When the operator initiates an AUTO RETURN, a short single beep informs the operator that the chair's "home" position has been successfully reached.
	When the operator selects one of the programmed positions, a short single beep informs the operator that the programmed position has been successfully reached.
Slow beep	When the operator presses and holds the PROGRAM button for one second, a slow beep, lasting five seconds, informs the operator that the PROGRAM mode is enabled. If one of the program POSITION buttons are pressed within 5 seconds, the chair's present position will be stored in memory.
Fast chirping sound	When the operator presses one of the programmed position buttons, but the PC control board determines that the programmed position data is invalid or that no position has been programmed for that particular program button, a fast chirping sound informs the operator that the programmed position data is invalid or has not been programmed and the function will not be performed.
Slow chirping sound	When the operator selects a single function or a programmed position function and a motor is detected to be drawing excessive current for more than 0.5 seconds, a slow chirping sound informs the operator of the current over-draw condition.
	When the operator selects a single function or a programmed position function and the function is run all the way to its end of travel (screw fully extended), a slow chirping sound informs the operator that the actuator motor's end of travel has been reached.
Intermittent beep (One second on, four seconds off)	Informs the operator / maintenance technician that the voltage levels (+5 VDC and +12 VDC) of the PC control board are below limits.

©Midmark Corporation 1994 SF-1399 Rev. 7/00

SECTION V
SCHEMATICS AND DIAGRAMS

SECTION VI
PARTS LIST

6.1 Introduction

The illustrated parts list provides information for identifying and ordering the parts necessary to maintain the unit in peak operating condition. Refer to paragraph 1.5 for parts ordering information.

The parts list also illustrates disassembly and assembly relationships of parts.

6.2 Description of Columns

The *Item* column of the parts list gives a component its own unique number. The same number is given to the component in the parts illustration. This allows a part number of a component to be found if the technician can visually spot the part on the illustration. The technician simply finds the component in question on the illustration and notes the item number of that component. Then, he finds that item number in the parts list. The row corresponding to the item number gives the technician the part number, a description of the component, and quantity of parts per subassembly. Also, if a part number is known, the location of that component can be determined by looking for the item number of the component on the illustration.

The *Part No.* column lists the MIDMARK part number for that component.

The *Description* column provides a physical description of the component.

The *Qty.* column lists the number of units of a particular component that is required for the subassembly. The letters “AR” denote “as required” when quantities of a particular component cannot be determined, such as: adhesive.

Bullets { • } in the *Part No.* column and the *Description* column show the indenture level of a component. If a component does not have a bullet, it is a main component of that illustration. If a component has a bullet, it is a subcomponent of the next component listed higher in the parts list than itself that does not have a bullet. Likewise, if a component has two bullets, it is a subcomponent of the next component listed higher in the parts list than itself that has only one bullet.

Return To Table Of Contents

Pictorial Index

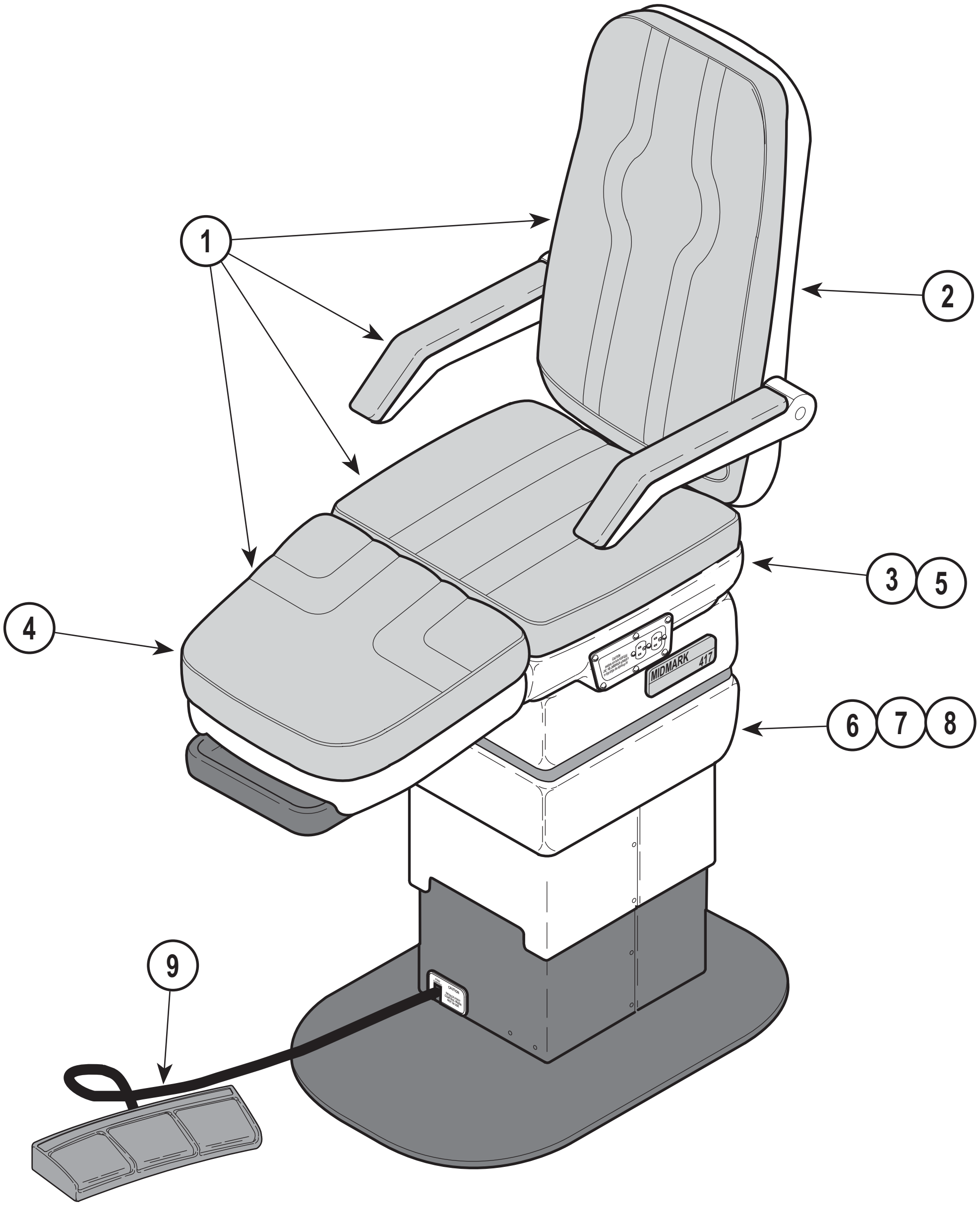

MA243400

Used on units with Serial Number BP1000 thru Present
Used on units with Serial Number V2200 thru Present

Item	Part No.	Description	Page
	417-001	417 Power Podiatry Treatment Chair ..	6-2
1	•	• Upholstery Set (Standard)	6-3.*
	•	• Upholstery Set (Standard)	
2	•	• Back Section Components	6-4.*
3	•	• Seat Section Components	6-5.*
	• •	• • Actuator Assembly (Domestic)	6-6
4	•	• Foot Section Components	6-8
5	•	• Upper Chair Elec. Comp. (Domestic)	6-9.*
6	•	• Lower Chair Electrical Components	6-11.*
7	•	• Power Base Assembly	6-12.*
8	• •	• • Base Sub-Assembly	6-13.*
	• •	• • Base Actuator Assembly	6-14
9	•	• Foot Control Assembly	6-15.*

Item	Part No.	Description	Page
		OPTIONAL ACCESSORIES	
	Refer to MEDICAL ACCESSORY BOOK {004-0096-00}		
10	9A93001	Hand Control Assembly	9A93
11	9A94001	Vision Block Assembly	9A94
12	9A95001	Instrument Tray Assembly {Prior to June, 1990}	9A95
13	9A96001	Utility Tray Assembly	9A96
14	~~9A135001~~	Stainless Steel Debris Tray Assy.	~~9A135~~
15	9A143001	Instrument Tray Assembly {After June, 1990}	9A143

Always Specify Model & Serial Number

© Midmark 1994 SF-1399 Rev. 1/10/14

Return To Table Of Contents

Pictorial Index

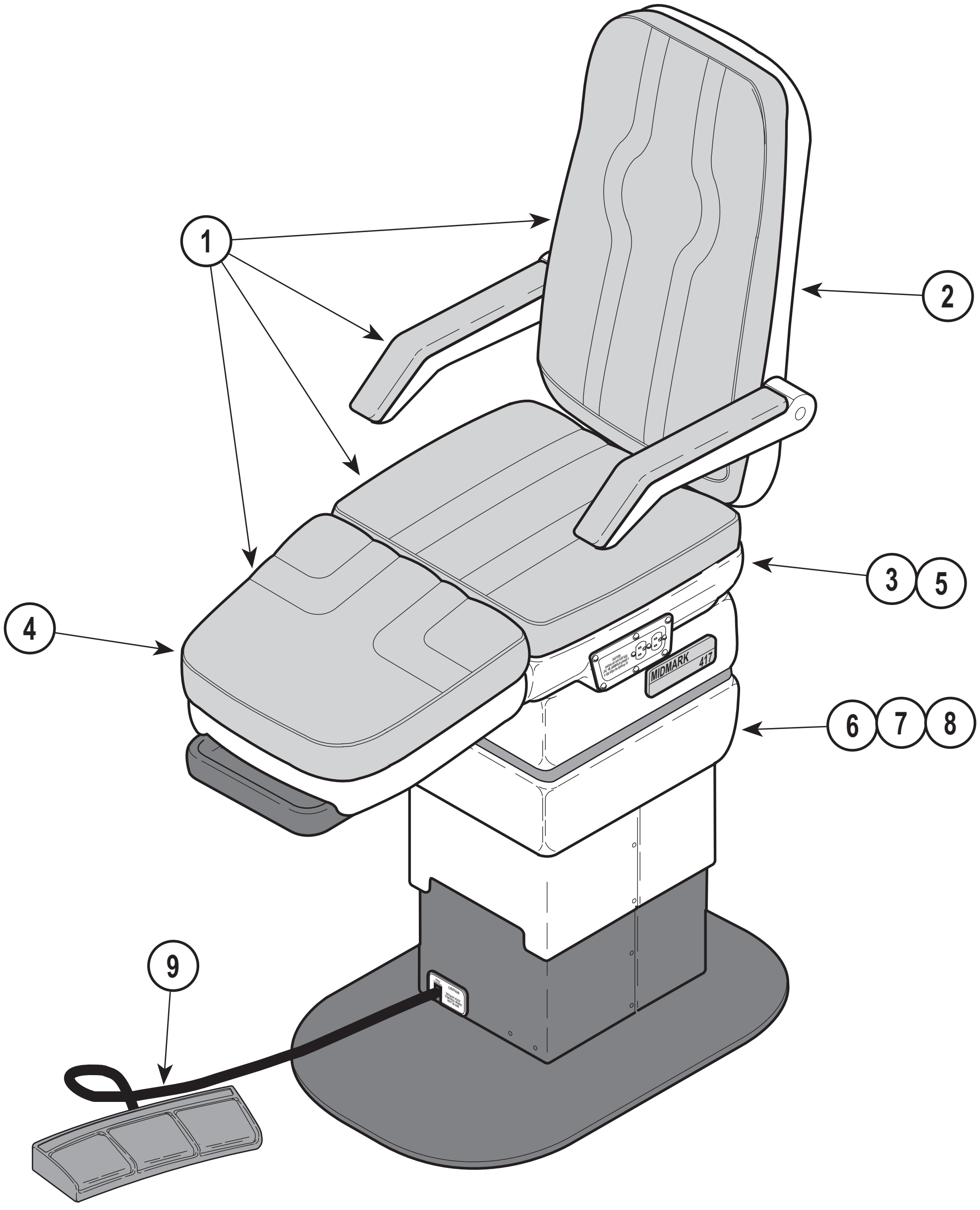

MA243400

Used on units with Serial Number EP1000 thru Present
Used on units with Serial Number V2200 thru Present

Item	Part No.	Description	Page
	417-003	417 Canadian Power Podiatry Treatment Chair	6-2.1
1	•	• Upholstery Set (Standard)	6-3.1
	•	• Upholstery Set (Soft Touch)	6-3.2
2	•	• Back Section Components	6-4.2
3	•	• Seat Section Components	6-5.*
	• •	• • Actuator Assembly (Canadian)	6-7
4	•	• Foot Section Components	6-8
5	•	• Upper Chair Elec. Comp. (Canadian)	6-10.*
6	•	• Lower Chair Electrical Comp.	6-11.2
7	•	• Power Base Assembly	6-12.*

Item	Part No.	Description	Page
8	• •	• • Base Sub-Assembly	6-13.1
	• •	• • Base Actuator Assembly	6-14
9	• 9A97002	• Foot Control Assembly	6-15.1
		OPTIONAL ACCESSORIES Refer to MEDICAL ACCESSORY BOOK {004-0096-00}	
10	• 9A93001	• Hand Control Assembly	9A93
11	• 9A94001	• Vision Block Assembly	9A94
12	• 9A96001	• Utility Tray Assembly	9A96
13	• ~~9A135001~~	• Stainless Steel Debris Tray Assy.	~~9A135~~
14	• 9A143001	• Instrument Tray Assembly	9A143

Always Specify Model & Serial Number

© Midmark 1994

Return To Table Of Contents

Upholstery Set (Standard)

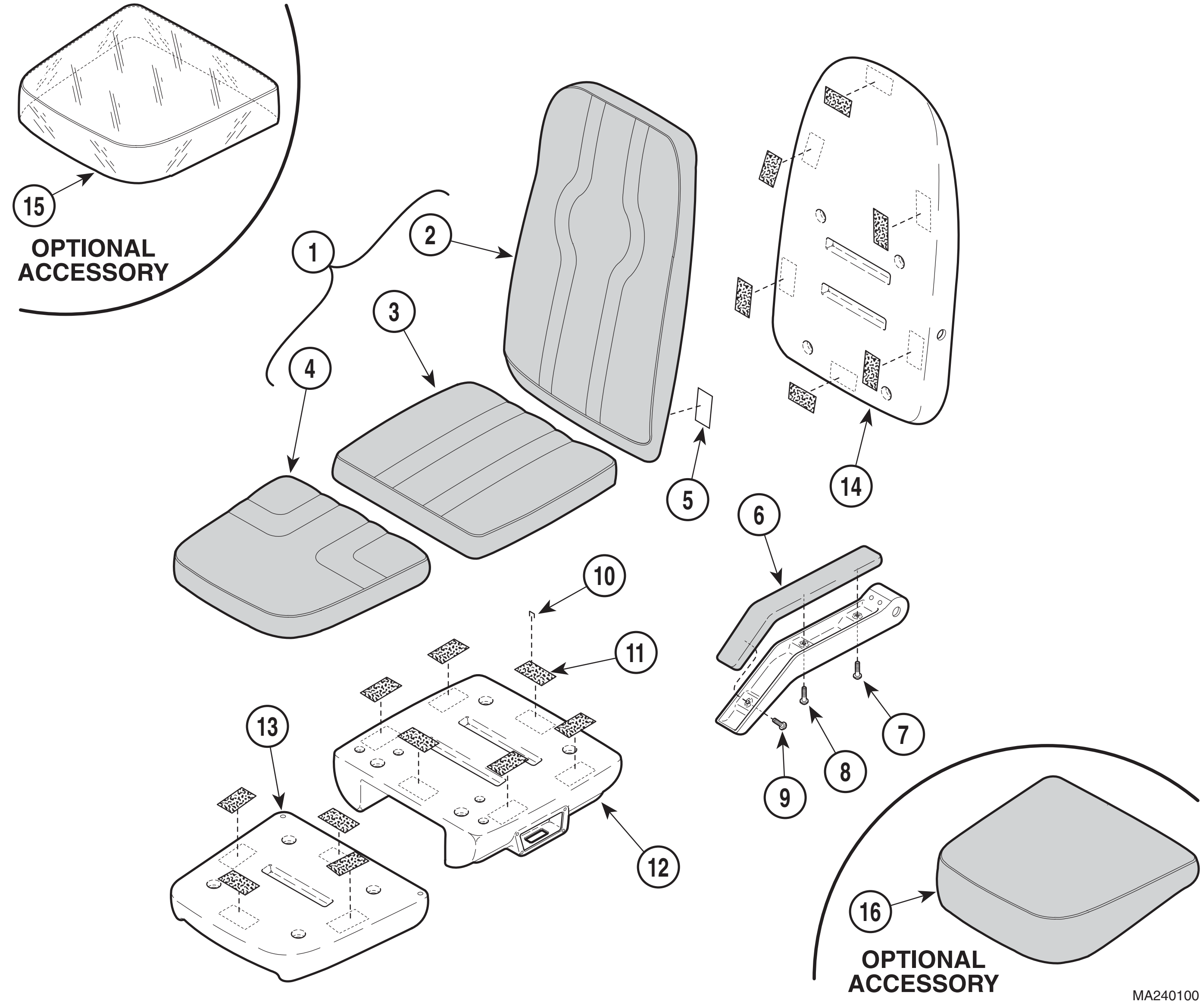

Color Selector......www.midmark.com

Used on units built prior to May, 1989

Item	Part No.	Description	Qty.
1	002-0261-XX	Upholstery Set (Includes Items 2 thru 6) {*Specify Color}	1
2	• 028-0208-00	• Back Section {*Specify Color}	1
3	• 028-0209-00	• Seat Section {*Specify Color}	1
4	• 028-0210-00	• Foot Section {*Specify Color}	1
5	• 061-0041-00	• Law Label	1
6	• 028-0207-00	• Arm Section {*Specify Color}	2
7	042-0059-03	Joint Connecting Bolt	2
8	042-0059-05	Joint Connecting Bolt	2
9	042-0059-01	Joint Connecting Bolt	2
10	042-0040-00	Staple (3/8")	96
11	053-0328-08	Dual Velcro Lock	16
12		Plastic Seat Section (Refer to "Seat Section Components" Elsewhere)	Ref
13		Plastic Foot Section (Refer to "Foot Section Components" Elsewhere)	Ref
14		Plastic Back Section (Refer to "Back Section Components" Elsewhere)	Ref
15	9A100001	Foot Section Cover (Optional)	1
16	9A1360XX	Surgery Foot Section (Optional) {* Specify Color}	1

* Click on the Color Selector link above to see available colors.

Always Specify Model & Serial Number

Upholstery Set (Standard & Cal 133)

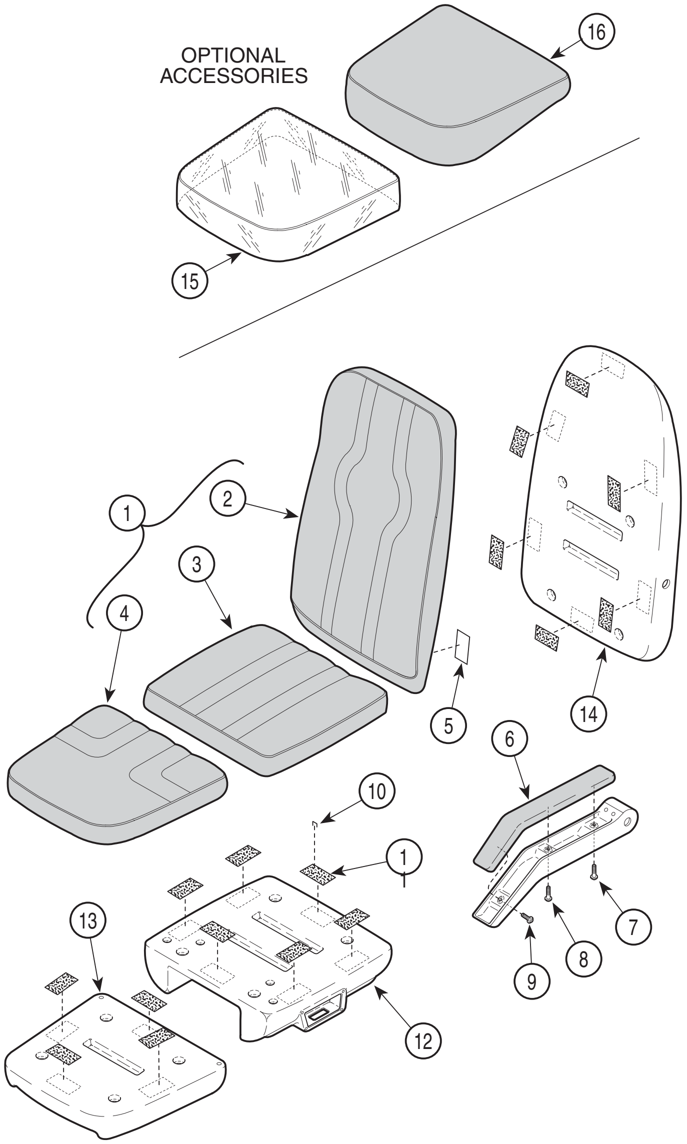

Color Selector......www.midmark.com

MA240100

Used on units built after May, 1989

Item	Part No.	Description	Qty.
1		Upholsery Set *(incl. items 2 thru 6):*	
	002-0261-xxx	*Standard* (*Specify Color)	1
	002-0842--xxx	*Cal 133* (*Specify Color)	1
2	•	• Back Section:	
	028-0208-00	*Standard* (*Specify Color) **............**	1
	028-0588-00-xxx	*Cal 133* (*Specify Color)	1
3	•	• Seat Section:	
	028-0209-00	*Standard* (*Specify Color)	1
	028-0589-00-xxx	*Cal 133 (* (*Specify Color)	1
4	•	• Foot Section:	
	028-0210-00	*Standard (* (*Specify Color)	1
	028-0590-00-xxx	*Cal 133* (*Specify Color)	1
5	• 061-0041-00	• Law Label	1
6	•	• Arm Section:	
	028-0207-00	Standard (*Specify Color)	2
	028-0587-00-xxx	Cal 133 (*Specify Color)	2

Item	Part No.	Description	Qty.
7	042-0059-03	Joint Connecting Bolt	2
8	042-0059-05	Joint Connecting Bolt	2
9	042-0059-01	Joint Connecting Bolt	2
10	042-0040-00	Staple (3/8")	96
11	029-3307-00	Velcro Kit *(includes all pcs shown)*	1
		For items 12 thru 14, refer to:	
12		"Seat Section Components"	Ref
13		"FootSection Components"	Ref
14		"Back Section Components"	Ref
		Items 15 & 16 are optional:	
15	9A100001	Foot Section Cover (Optional)	1
16	9A1360XX	Surgery Foot Section (Optional)	1

* Click on the Color Selector link above to see available colors.

Always Specify Model & Serial Number

Return To Table Of Contents

Upholstery Set (Soft Touch)

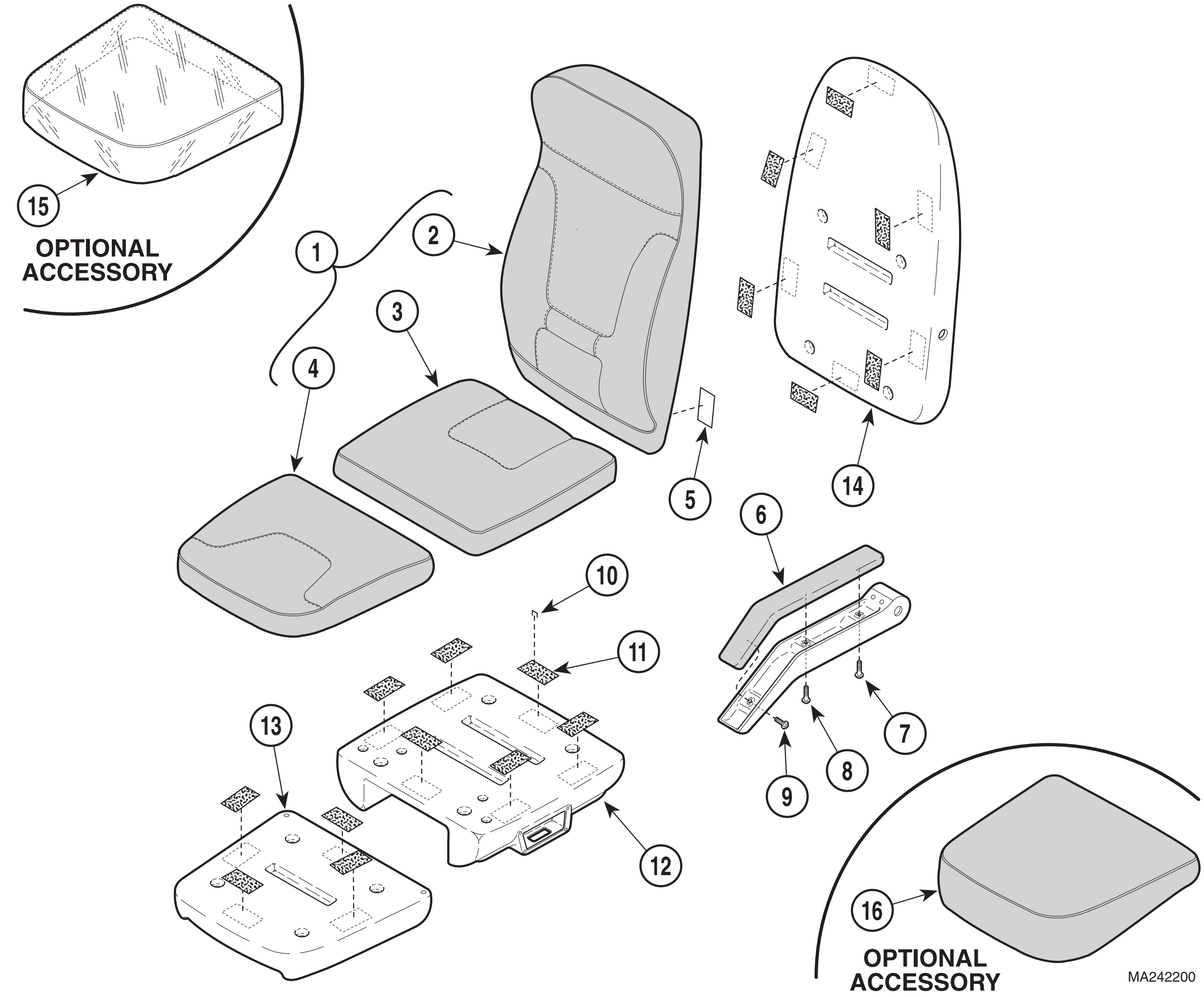

Color Selector......www.midmark.com

Used on units built from May, 1989 thru August, 2005

Item	Part No.	Description	Qty.
1	(*N.L.A.*)	Upholstery Set (Includes Items 2 thru 6)	1
2	• (*N.L.A.*)	• Back Section	1
3	• (*N.L.A.*)	• Seat Section	1
4	• (*N.L.A.*)	• Foot Section	1
5	• 061-0041-00	• Law Label	1
6	• 028-0207-00	• Arm Section { * Specify Code}	2
7	• 042-0059-03	Joint Connecting Bolt	2
8	• 042-0059-05	Joint Connecting Bolt	2
9	• 042-0059-01	Joint Connecting Bolt	2
10	042-0040-00	Staple (3/8")	96
11	029-3307-00	Velcro Kit *(includes all pcs shown)*	1
12		Plastic Seat Section (Refer to "Seat Section Components" Elsewhere)	Ref
13		Plastic Foot Section (Refer to "Foot Section Components" Elsewhere)	Ref
14		Plastic Back Section (Refer to "Back Section Components" Elsewhere)	Ref
15	9A100001	Foot Section Cover (Optional)	1
16	9A1360XX	Surgery Foot Section (Optional) { * Specify Color}	1

* Click on the Color Selector link above to see available colors.

(*N.L.A.*) Denotes "No Longer Available"

Always Specify Model & Serial Number

Return To Table Of Contents

Back Section Components

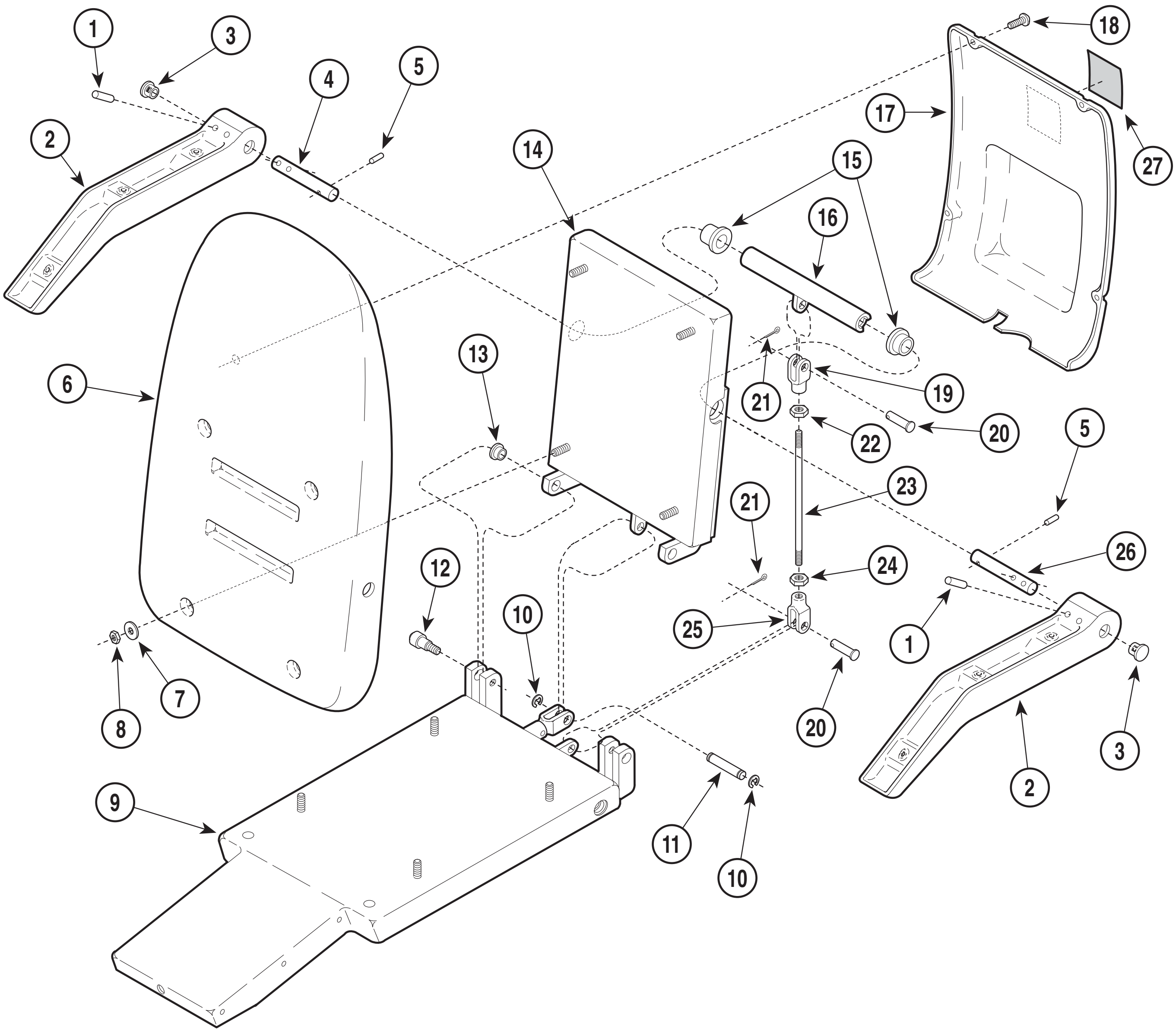

Used on units with Serial Number BP1000 thru BP1850

Item	Part No.	Description	Qty.
1	042-0064-01	Groove Pin	4
2	020-0063-00	Arm Casting	2
3	053-0050-04	Hole Plug	2
4	057-0211-00	Arm Shaft (R.H.)	1
5	042-0046-01	Groove Pin	2
6	053-0290-00	Plastic Back Section	1
7	045-0001-02	Washer	4
8	041-0250-00	Nut	4
9		Seat Weldment (Refer to "Seat Section Components" Elsewhere)	Ref
10	042-0007-02	E-Ring	2
11	042-0048-08	Clevis Pin	1
12	042-0014-19	Shoulder Screw	2
13	016-0131-08	Flanged Bearing	2
14	030-0894-10	Back Weldment	1
15	016-0131-07	Flanged Bearing	2
16	030-0536-00	Arm Tube Weldment (used only on units built prior to 1-18-1990)	1
	030-0722-00	Arm Tube Weldment (used only on units built after 1-18-1990)	1
17	053-0322-00	Back Cover	1
18	040-0006-00	Screw	4
19	042-0099-01	Yoke End (L. H. Threads)	1
20	042-0005-07	Clevis Pin	2
21	042-0003-01	Cotter Pin	2
22	041-0375-15	Locknut (L.H. Threads)	1
23	057-0255-00	Plated Arm Rod	1
24	041-0375-14	Locknut (R.H. Threads)	1
25	042-0099-00	Yoke End (R.H. Threads)	1
26	057-0212-00	Arm Shaft (L.H.)	1
27	061-0033-00	Caution Label	1

Always Specify Model & Serial Number

Return To Table Of Contents

Back Section Components

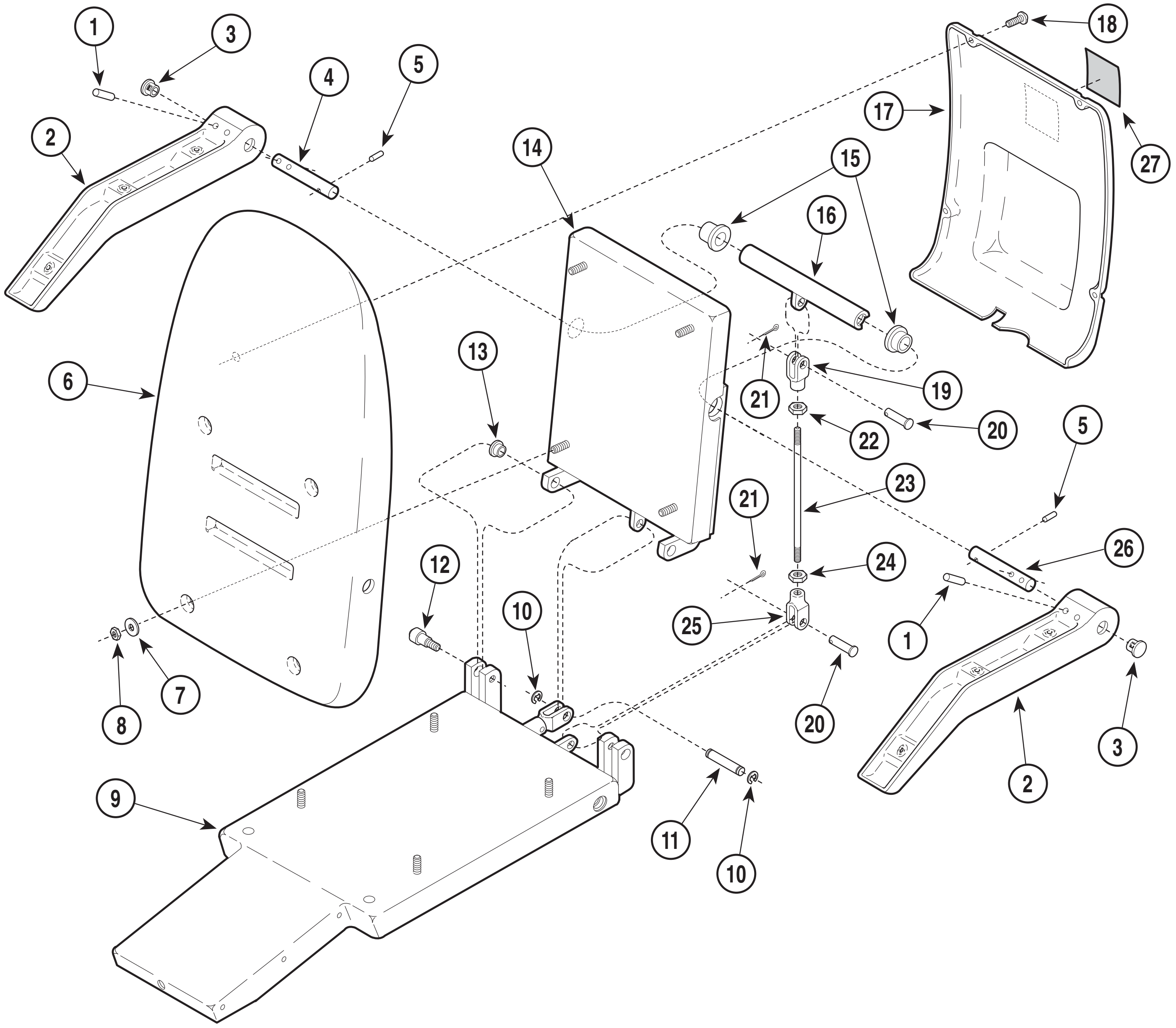

MA2402-00

Used on units with Serial Number BP1851 thru BP2655

Item	Part No.	Description	Qty.	Item	Part No.	Description	Qty.
1	042-0064-01	Groove Pin	4	14	030-0894-10	Back Weldment	1
2	020-0063-02	Arm Casting	2	15	016-0131-07	Flanged Bearing	2
3	053-0050-04	Hole Plug	2	16	030-0722-00	Arm Tube Weldment	1
4	057-0211-00	Arm Shaft (R.H.)	1	17	053-0322-00	Back Cover	1
5	042-0046-01	Groove Pin	2	18	040-0006-00	Screw	4
6	053-0290-00	Plastic Back Section	1	19	042-0099-01	Yoke End (L. H. Threads)	1
7	045-0001-02	Washer	4	20	042-0005-07	Clevis Pin	2
8	041-0250-00	Nut	4	21	042-0003-01	Cotter Pin	2
9		Seat Weldment (Refer to "Seat Section Components" Elsewhere)	Ref	22	041-0375-15	Locknut (L.H. Threads)	1
				23	057-0255-00	Plated Arm Rod	1
10	042-0007-02	E-Ring	2	24	041-0375-14	Locknut (R.H. Threads)	1
11	042-0048-08	Clevis Pin	1	25	042-0099-00	Yoke End (R.H. Threads)	1
12	042-0014-19	Shoulder Screw	2	26	057-0212-00	Arm Shaft (L.H.)	1
13	016-0131-08	Flanged Bearing	2	27	061-0033-00	Caution Label	1

Always Specify Model & Serial Number

© Midmark 1994 SF-1399

Return To Table Of Contents

Back Section Components

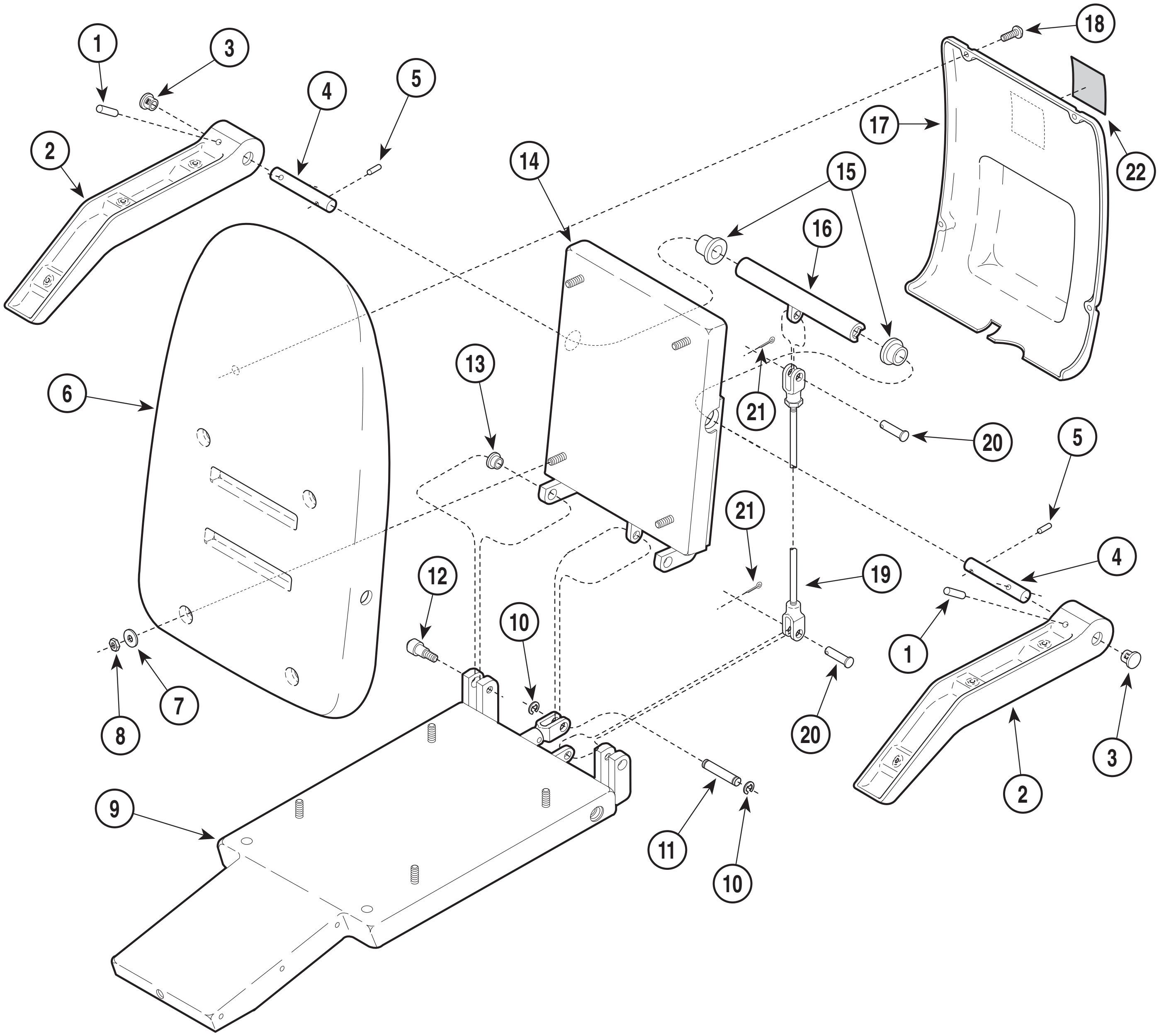

Used on units with Serial Number BP2656 thru BP7367 & EP1000 thru EP1109

Item	Part No.	Description	Qty.
1	042-0067-06	Groove Pin	2
2	020-0141-00	Arm Casting	2
3	053-0050-04	Hole Plug	2
4	057-0363-00	Arm Shaft	2
5	042-0046-01	Groove Pin	2
6	053-0290-00	Plastic Back Section	1
7	045-0001-02	Washer	4
8	041-0250-00	Nut	4
9		Seat Weldment (Refer to "Seat Section Components" Elsewhere)	Ref
10	042-0007-02	E-Ring	2
11	042-0048-08	Clevis Pin	1
12	042-0014-19	Shoulder Screw	2
13	016-0131-08	Flanged Bearing	2
14	030-0894-10	Back Weldment	1
15	016-0131-07	Flanged Bearing	2
16	030-0965-00	Arm Tube Weldment	1
17	053-0322-00	Back Cover	1
18	040-0006-00	Screw	4
19	029-1478-00	Linkage Assembly	1
20	042-0005-07	Clevis Pin	2
21	042-0003-01	Cotter Pin	2
22	061-0033-00	Caution Label	1

Always Specify Model & Serial Number

Return To Table Of Contents

Back Section Components

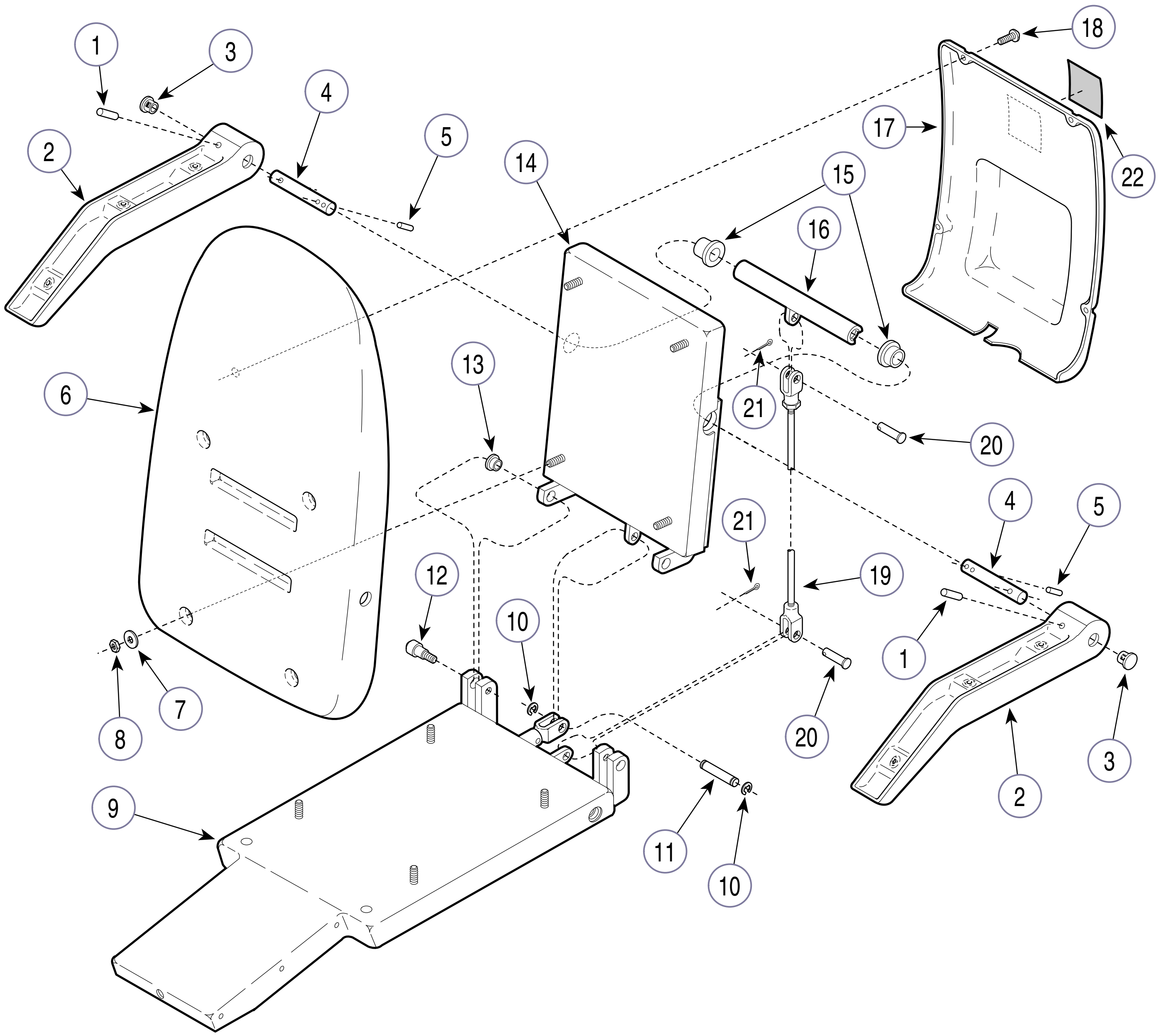

Used on units with Serial Number BP7368 thru BP7554 & EP1110 thru EP1114

Item	Part No.	Description	Qty.
1	042-0067-06	Groove Pin	2
2	020-0141-00	Arm Casting	2
3	053-0050-04	Hole Plug	2
4	057-0722-00	Arm Shaft	2
5	042-0046-01	Groove Pin	2
6	053-0290-00	Plastic Back Section	1
7	045-0001-02	Washer	4
8	041-0250-00	Nut	4
9		Seat Weldment (Refer to "Seat Section Components" Elsewhere)	Ref
10	042-0007-02	E-Ring	2
11	042-0048-08	Clevis Pin	1
12	042-0014-19	Shoulder Screw	2
13	016-0131-08	Flanged Bearing	2
14	030-0894-10	Back Weldment	1
15	016-0131-07	Flanged Bearing	2
16	030-0965-00	Arm Tube Weldment	1
17	053-0322-00	Back Cover	1
18	040-0006-00	Screw	4
19	029-1478-00	Linkage Assembly	1
20	042-0005-07	Clevis Pin	2
21	042-0003-01	Cotter Pin	2
22	061-0033-00	Caution Label	1

Always Specify Model & Serial Number

Back Section Components

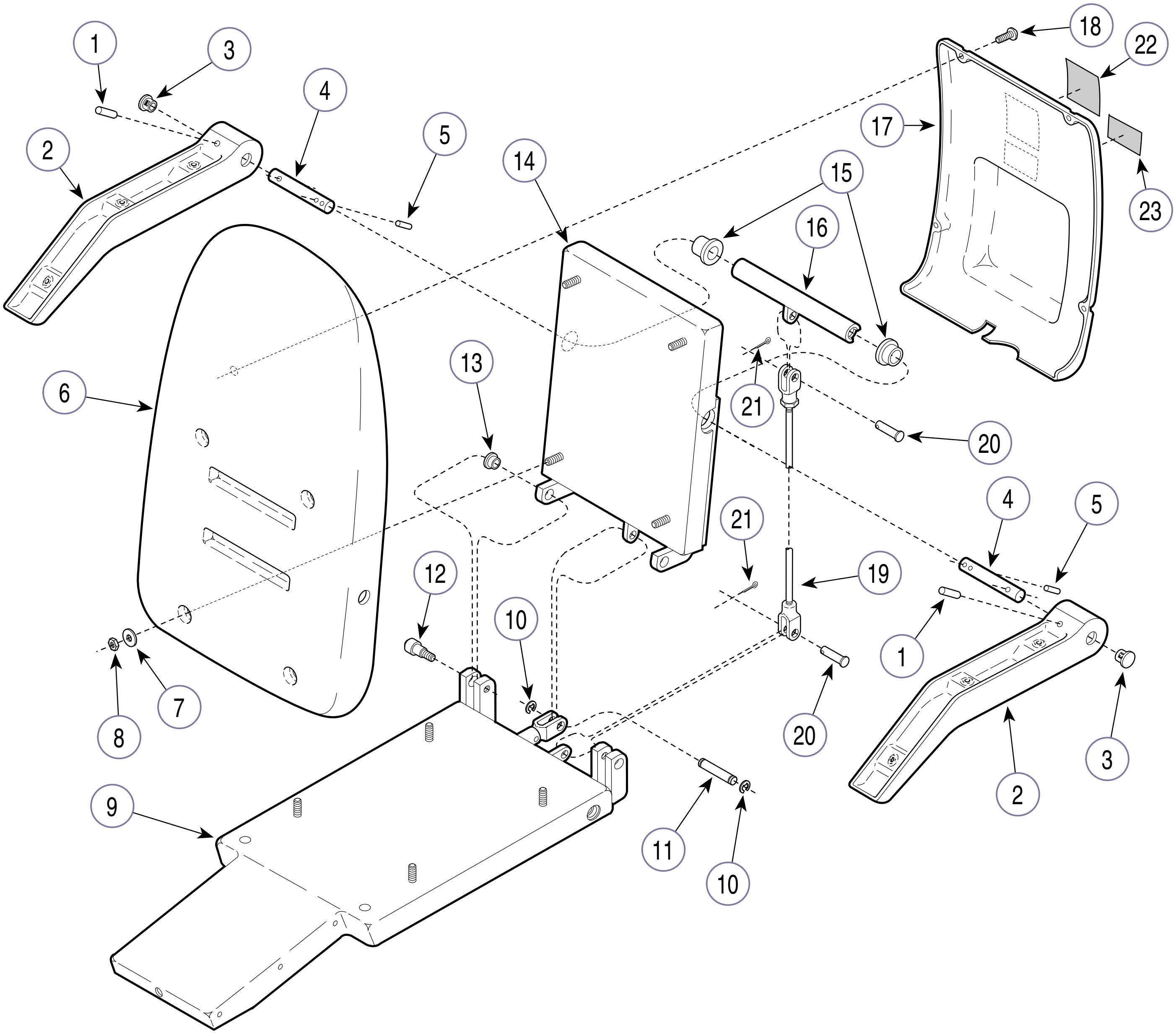

MA240203i

Used on units with Serial Number BP7555 & EP1115 thru Present
Used on units with Serial Number V2200 thru Present

Item	Part No.	Description	Qty.
1	042-0067-06	Groove Pin	2
2	020-0141-00	Arm Casting	2
3	053-0050-04	Hole Plug	2
4	057-0722-00	Arm Shaft	2
5	042-0046-01	Groove Pin	2
6	053-0290-00	Plastic Back Section	1
7	045-0001-02	Washer	4
8	041-0250-00	Nut	4
9		Seat Weldment (Refer to "Seat Section Components" Elsewhere)	Ref
10	042-0007-02	E-Ring	2
11	042-0048-08	Clevis Pin	1
12	042-0014-19	Shoulder Screw	2
13	016-0131-08	Flanged Bearing	2
14	030-1417-10	Back Weldment	1
15	016-0131-07	Flanged Bearing	2
16	030-0965-00	Arm Tube Weldment	1
17	053-0322-00	Back Cover	1
18	040-0006-00	Screw	4
19	029-1478-00	Linkage Assembly	1
20	042-0005-07	Clevis Pin	2
21	042-0063-00	Rue Ring Cotter Pin	2
22	061-0033-00	Caution Label	1
23	061-0917-00	Fuse Label	1

Always Specify Model & Serial Number

Return To Table Of Contents

Seat Section Components

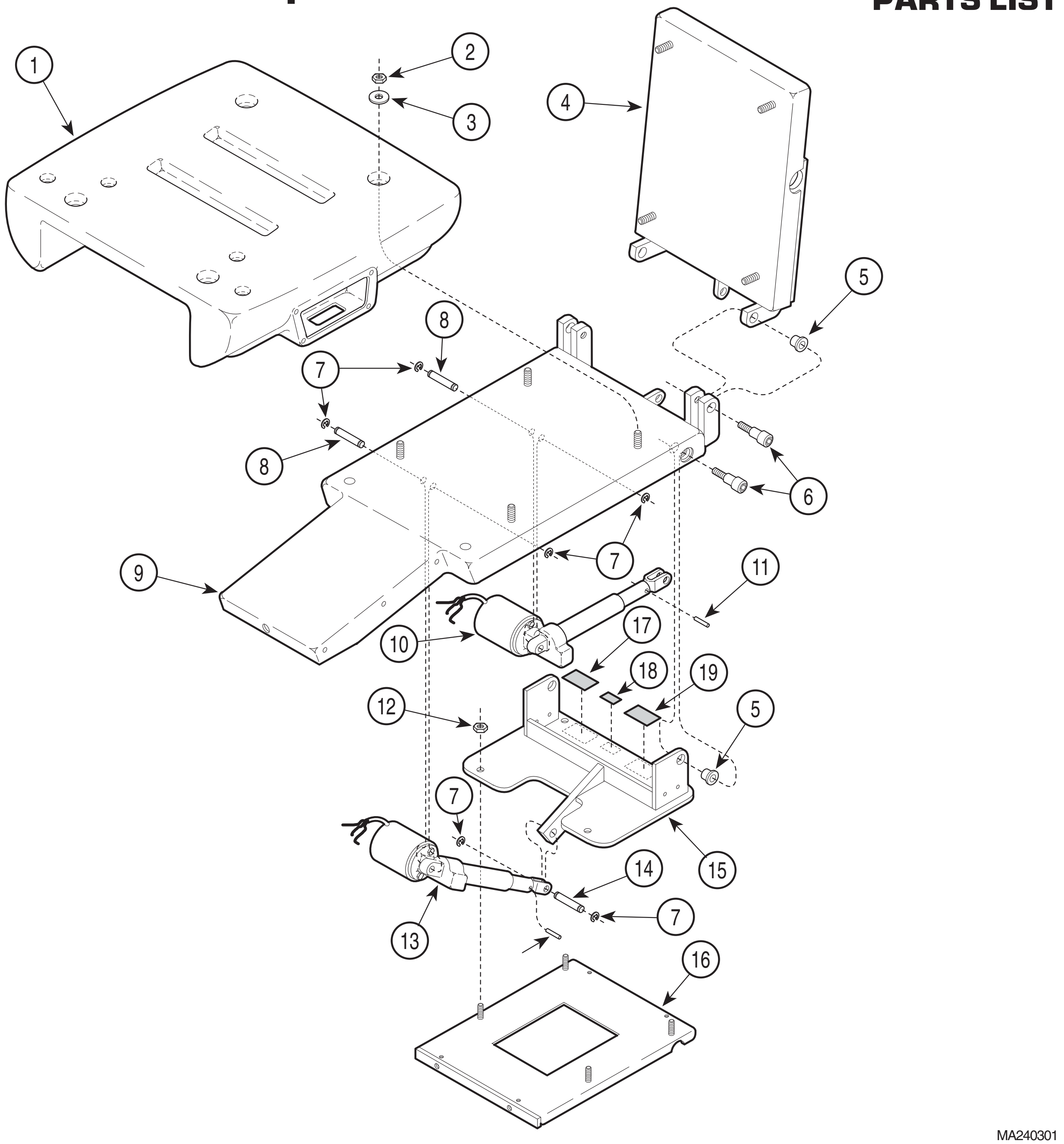

Item	Part No.	Description	Qty.
1	053-0289-00	Plastic Seat Section - Domestic	1
	053-0618-00	Plastic Seat Section - Canadian	1
2	041-0250-00	Nut	4
3	045-0001-02	Washer	4
4		Back Weldment (Refer to "Back Section Components" Elsewhere)	Ref
5	016-0131-08	Flanged Bearing	4
6	042-0014-19	Shoulder Screw (Apply Loctite #042-0025-00)	4
7	042-0007-02	E-Ring	6
8	042-0048-00	Clevis Pin	2
9	030-0895-10	Seat Weldment	1
10		Back Actuator Assy. (Refer to "Actuator Assembly- Domestic " Elsewhere)	Ref
		Back Actuator Assy. (Refer to "Actuator Assembly- Canadian " Elsewhere)	Ref
11	042-0001-14	Roll Pin	2
12	041-0375-10	Nut	4
13		Tilt Actuator Assy. - (Refer to "Actuator Assembly- Domestic " Elsewhere)	Ref
		Tilt Actuator Assy. - (Refer to "Actuator Assembly- Canadian " Elsewhere)	Ref
14	042-0048-08	Clevis Pin	1
15	030-0532-00	Upright Weldment	1
16		Base Mounting Plate Weldment (Refer to "Base Sub-Assembly" Elsewhere)	Ref
17		Serial Tag	1
18	561-0016-00	Patient Pending Label	1
19	061-0293-01	Danger Label	1

Always Specify Model & Serial Number

Return To Table Of Contents

Actuator Assembly (Domestic)

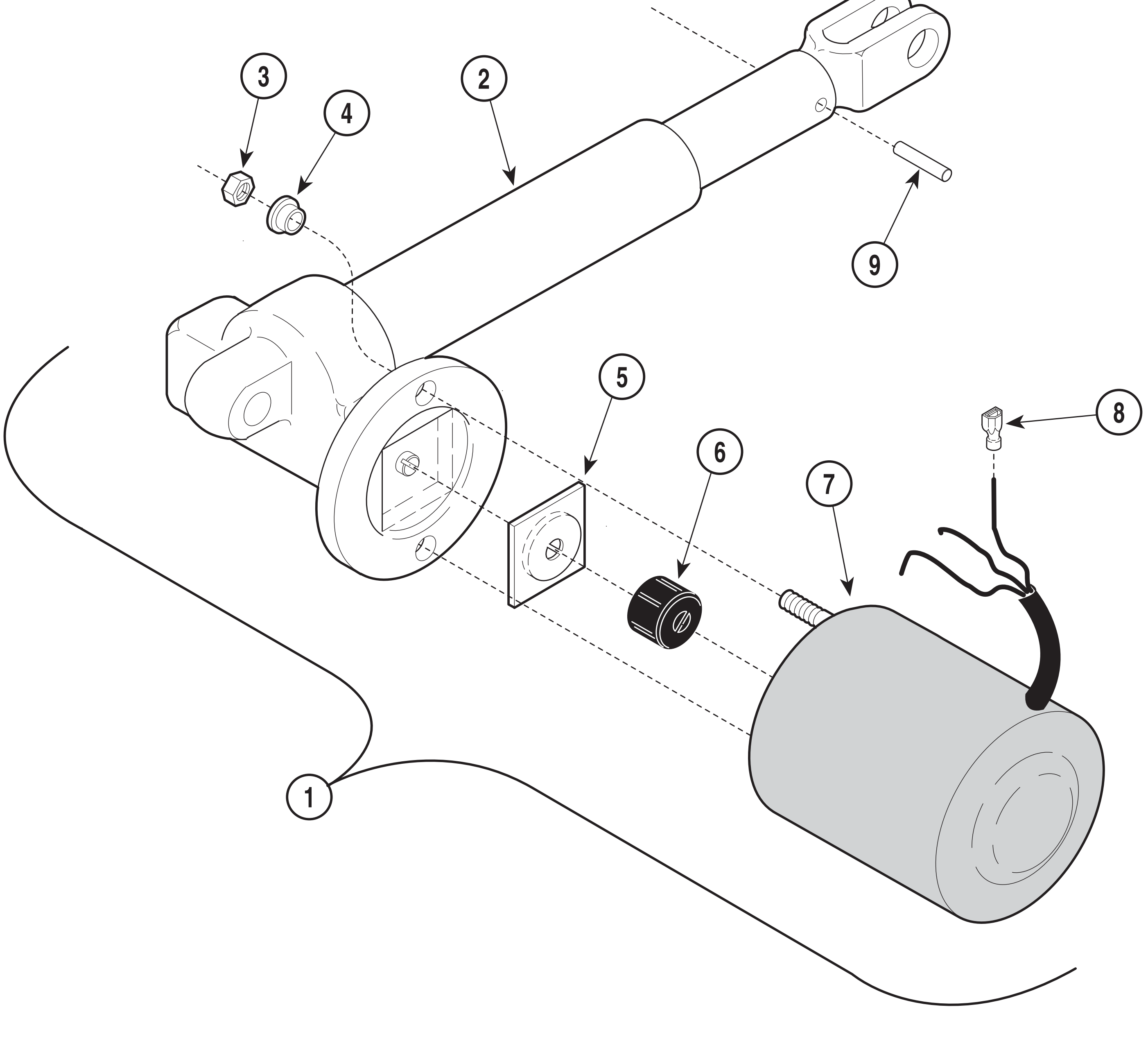

MA245100

Used on units with Serial Number BP1000 thru BP4789, BP4814 thru BP4957, BP5046 thru BP5049 and BP5052 thru BP5062

Item	Part No.	Description	Qty.
1	~~002-0391-00~~	Actuator Assembly (Included Items 2 thru 8, Replaced with 002-0727-00)	1
2	• ~~016-0358-01~~	• Actuator Mechanism	1
3	•	• Nut	2
4	• 053-0198-00	• Shoulder Washer	2
5	• 016-0237-00	• Actuator Brake	1
6	• 016-0509-00	• Motor Coupler	1
7	• 002-0574-00	• Motor	1
8	• 015-0312-00	• Nylon Coupler Terminals	3
9	042-0001-14	Roll Pin	1

Always Specify Model & Serial Number

Actuator Assembly (Domestic)

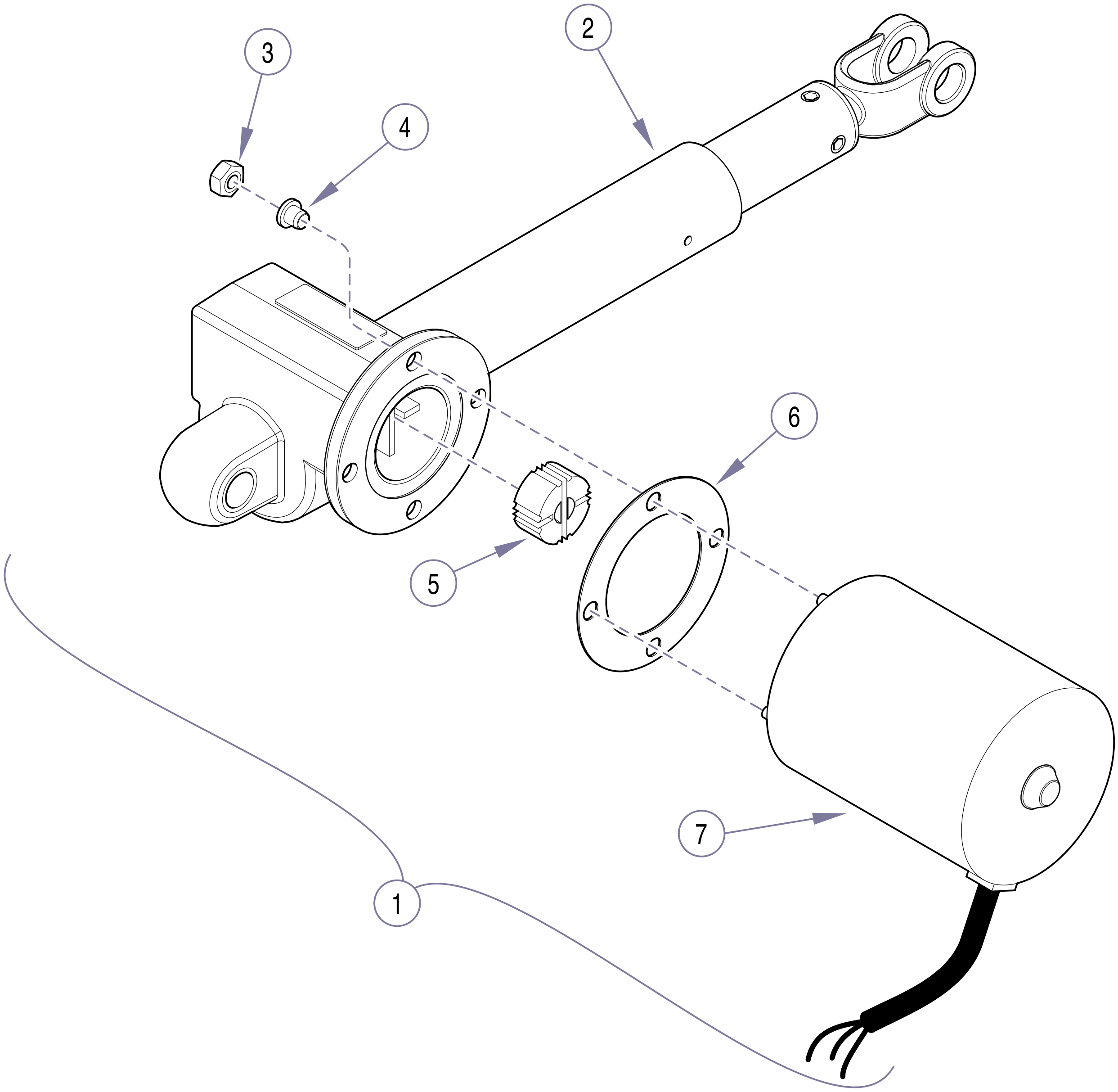

MA604100i

Used on units with Serial Number BP4790 thru BP4813, BP4958 thru BP5045, BP 5050 thru 5051, BP5063 thru BP7667

Item	Part No.	Description	Qty.
1	~~002-0564-00~~	Actuator Assembly (Included Items 2 thru 8, Replaced with 002-0727-00)	1
2	•	• Actuator Mechanism	1
3	• 041-0010-10	• Nut	2
4	• 053-0198-00	• Shoulder Washer	2
5	• 016-0662-00	• Motor Coupler	1
6	• 053-0834-00	• Isolation Washer	1
7	• 015-1085-00	• Motor	1
8	• 015-0312-00	• Nylon Coupler Terminals	3
9	042-0001-14	Roll Pin	1

Always Specify Model & Serial Number

Return To Table Of Contents

Actuator Assembly (Domestic)

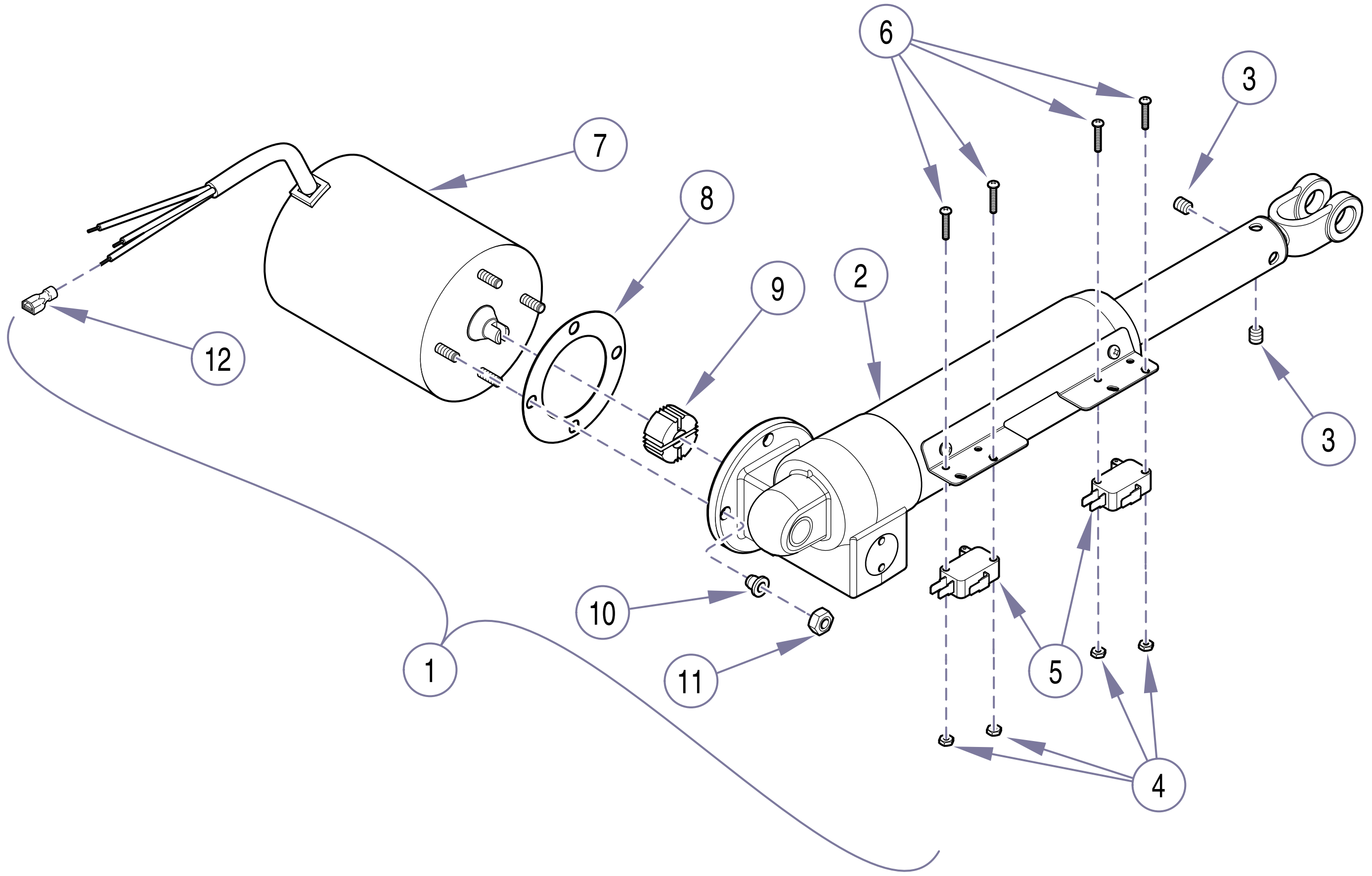

MA620100i

Used on units with Serial Number BP7668 thru Present
Used on units with Serial Number V2200 thru Present

Item	Part No.	Description	Qty.
1	002-0727-00	Actuator Assembly (Includes Items 2 thru 13)	1
2	•	• Actuator Mechanism	1
3	• 040-0312-60	• Set Screw	2
4	• 041-0004-02	• Hex Nut	4
5	• 015-3423-00	• Limit Switch	2
6	• 040-0004-09	• Screw	4
7	• 015-1085-00	• Actuator Motor	1
8	• 053-0834-00	• Isolation Washer	1
9	• 016-0662-00	• Motor Coupler	1
10	• 053-0198-00	• Shoulder Washer	3
11	• 041-0010-10	• Nut	3
12	• 015-0315-15	• Nylon Coupler Terminals	3

Always Specify Model & Serial Number

Return To Table Of Contents

Actuator Assembly (Canadian)

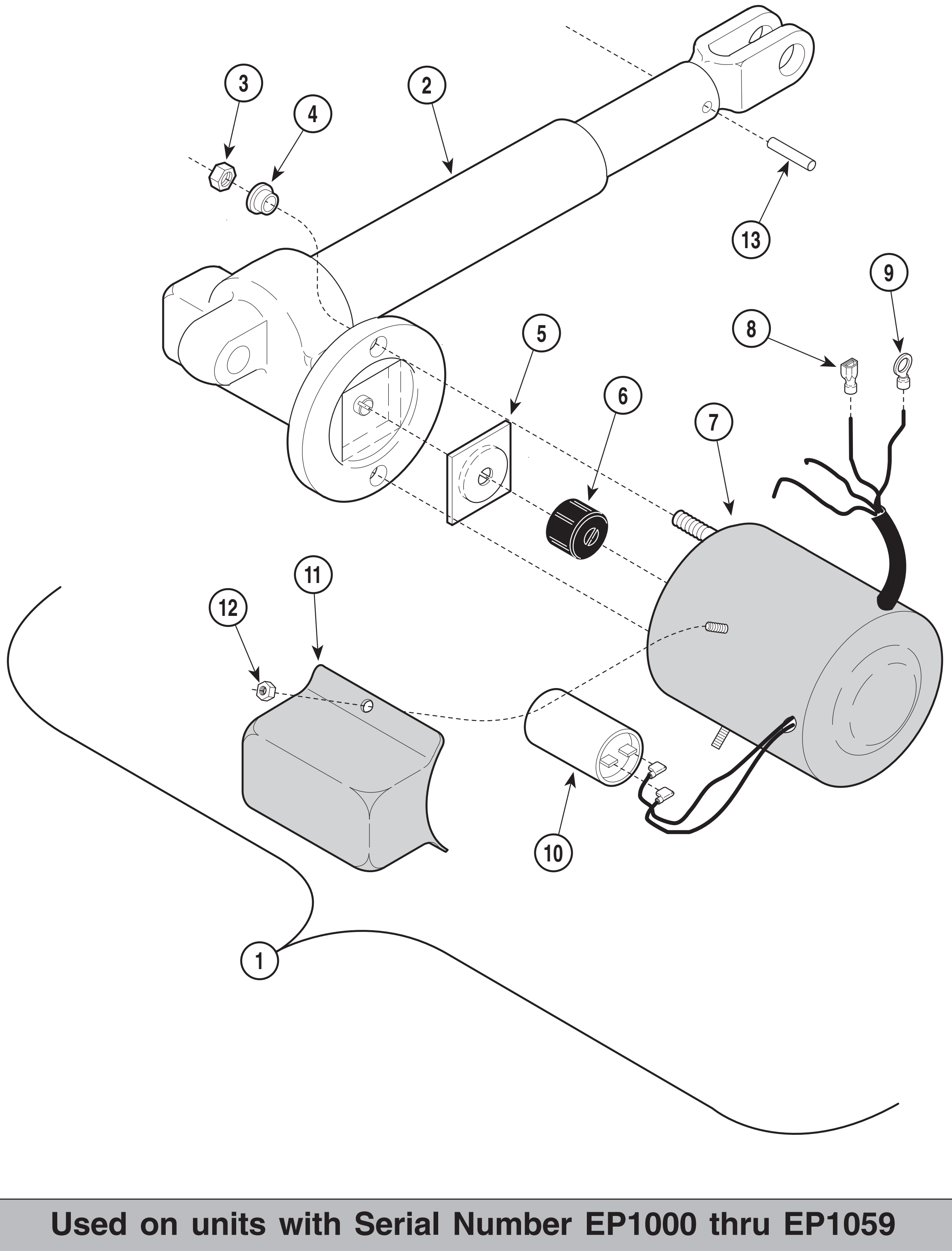

MA245400

Used on units with Serial Number EP1000 thru EP1059

Item	Part No.	Description	Qty.
1	002-0564-02	Back / Tilt Actuator Kit - Canadian *(includes items 2 thru 12)*	1
2	• 016-0358-01	• Actuator Mechanism	1
3	•	• Nut	2
4	• 053-0198-00	• Shoulder Washer	2
5	• 016-0237-00	• Actuator Brake	1
6	• 016-0509-00	• Motor Coupler	1
7	• 002-0574-07	• Motor	1
8	• 015-0312-00	• Nylon Coupler Terminals	3
9	• 015-0310-01	• Ring Terminal	1
10	• 015-0437-02	• Capacitor	1
11	•	• Capacitor Cover	1
12	•	• Nut	2
13	042-0001-14	Roll Pin	1

Always Specify Model & Serial Number

Return To Table Of Contents

Actuator Assembly (Canadian)

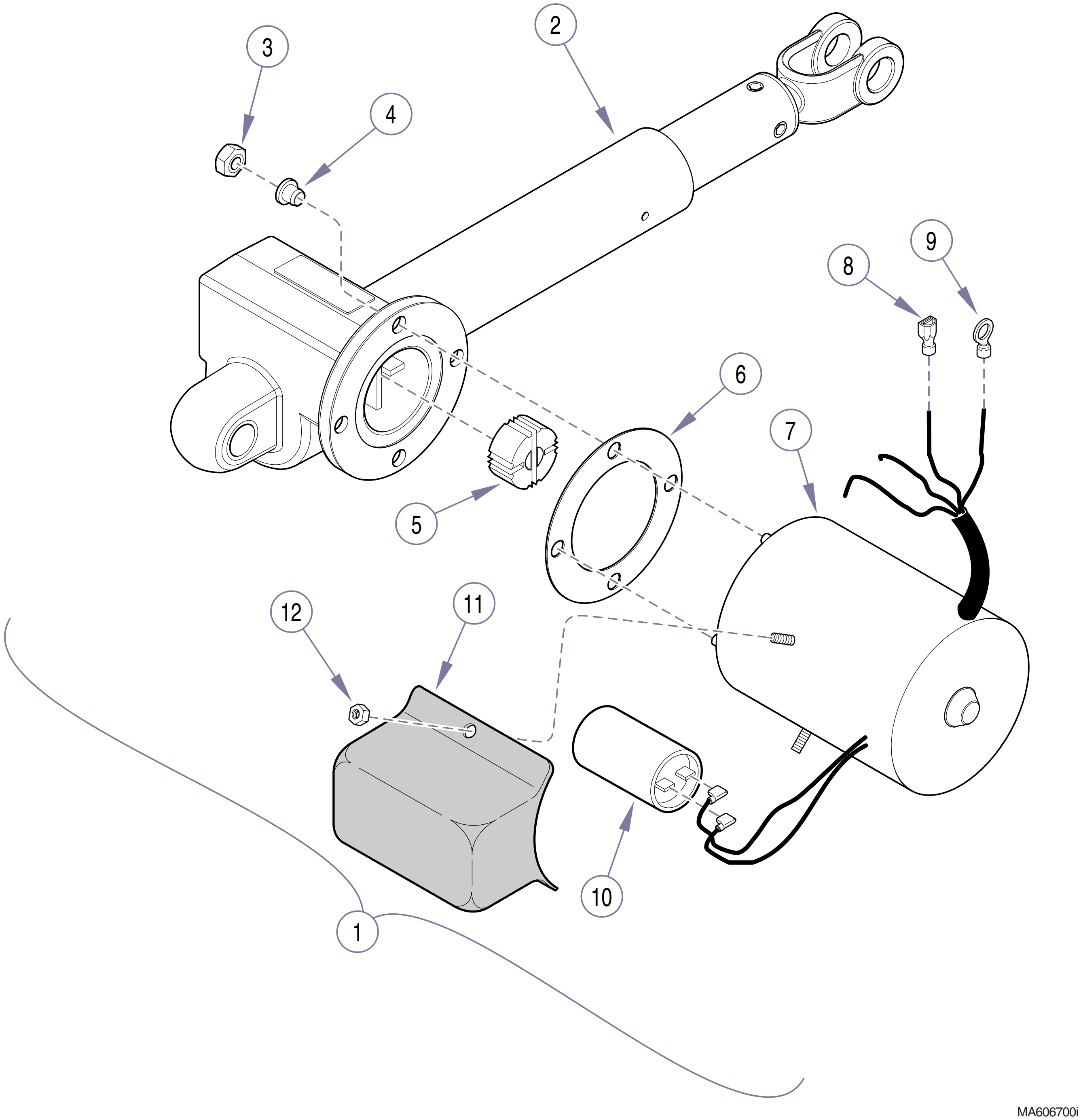

Used on units with Serial Number EP1060 thru Present
Used on units with Serial Number V2200 thru Present

Item	Part No.	Description	Qty.
1	002-0564-02	Back / Tilt Actuator Kit - Canadian *(includes items 2 thru 12)*	1
2	•	• Actuator Mechanism	1
3	• 041-0010-10	• Nut	4
4	• 053-0198-00	• Shoulder Washer	4
5	• 016-0662-00	• Motor Coupler	1
6	• 053-0834-00	• Isolation Washer	1
7	• 015-1085-07	• Motor	1
8	• 015-0312-00	• Nylon Coupler Terminals	3
9	• 015-0310-01	• Ring Terminal	1
10	• 015-0437-02	• Capacitor	1
11	•	• Capacitor Cover	1
12	•	• Nut	2
13	042-0001-14	Roll Pin	1

Always Specify Model & Serial Number

© Midmark 1994 SF-1399 Rev. 9/05

Return To Table Of Contents

Foot Section Components

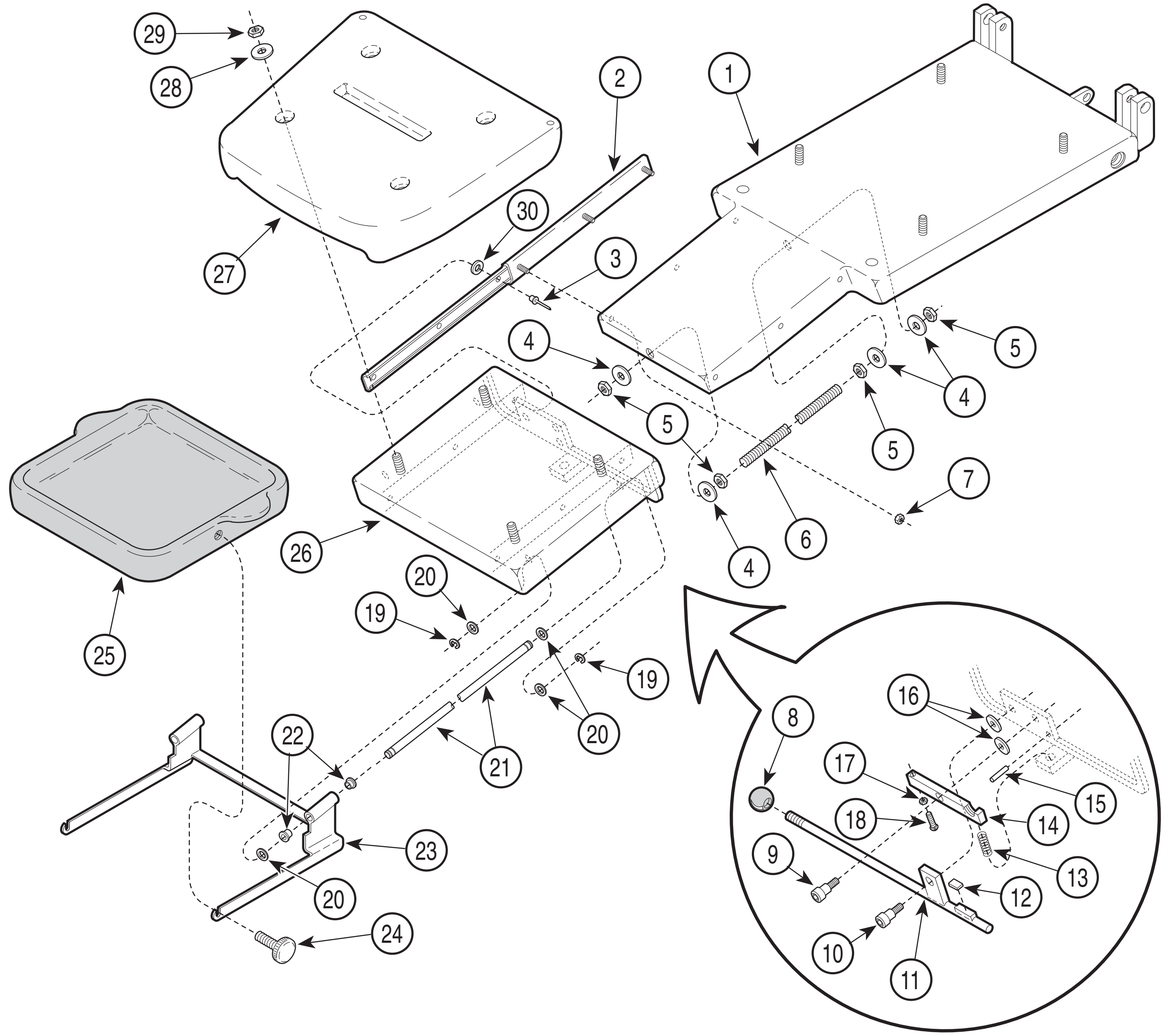

MA240401

Item	Part No.	Description	Qty.
1		Seat Weldment (Refer to "Seat Section Components" Elsewhere)	Ref
2	002-0868-02	Foot Section Slide Kit (Incl. Fasteners)	1
3	042-0010-15	Pop Rivet	6
4	045-0001-51	Washer	4
5	041-0500-00	Nut	4
6	042-0088-00	Threaded Brake Shaft	1
7	041-0008-02	Nylock Nut	6
8	016-0357-00	Knob	1
9	042-0014-20	Shoulder Screw (Apply Loctite #042-0025-00)	1
10	042-0014-06	Shoulder Screw (Apply Loctite #042-0025-00)	1
11	030-0603-00	Lever Weldment	1
12	053-0018-00	Nyl-O-Tape (1")	1
13	025-0042-00	Compression Spring	1
14	051-0566-00	Plated Threaded Lever	1
15	042-0046-00	Groove Pin	1
16	045-0007-06	Bearing Washer	2
17	041-0250-12	Jam Nut	1
18	040-0250-78	Carriage Bolt	1
19	042-0007-00	E-Ring	4
20	053-0021-00	Rubber Washer	8
21	057-0219-00	Debris Tray Shaft	2
22	053-0226-01	Snap-In-Nyliner Bearing	4
23	002-0378-00	Debris Tray Wldmt. Kit (Inc. Item 22)	1
24	016-0343-00	Knurled Torque Knob	2
25	002-0330-00	Debris Tray Kit (Includes Item 24)	1
	053-0292-00	Debris Tray (Less Knob)	1
26	030-0533-00	Foot Section Weldment	1
27	053-0288-00	Plastic Foot Section	1
28	045-0001-02	Washer	4
29	041-0250-00	Nut	4
30	045-0001-39	Washer (One Side Only)	3

Always Specify Model & Serial Number

Upper Chair Electrical Components (Domestic)

NOTE: A smaller PC board is used in all replacement kits.
It is a direct replacement for the two-part PC board.

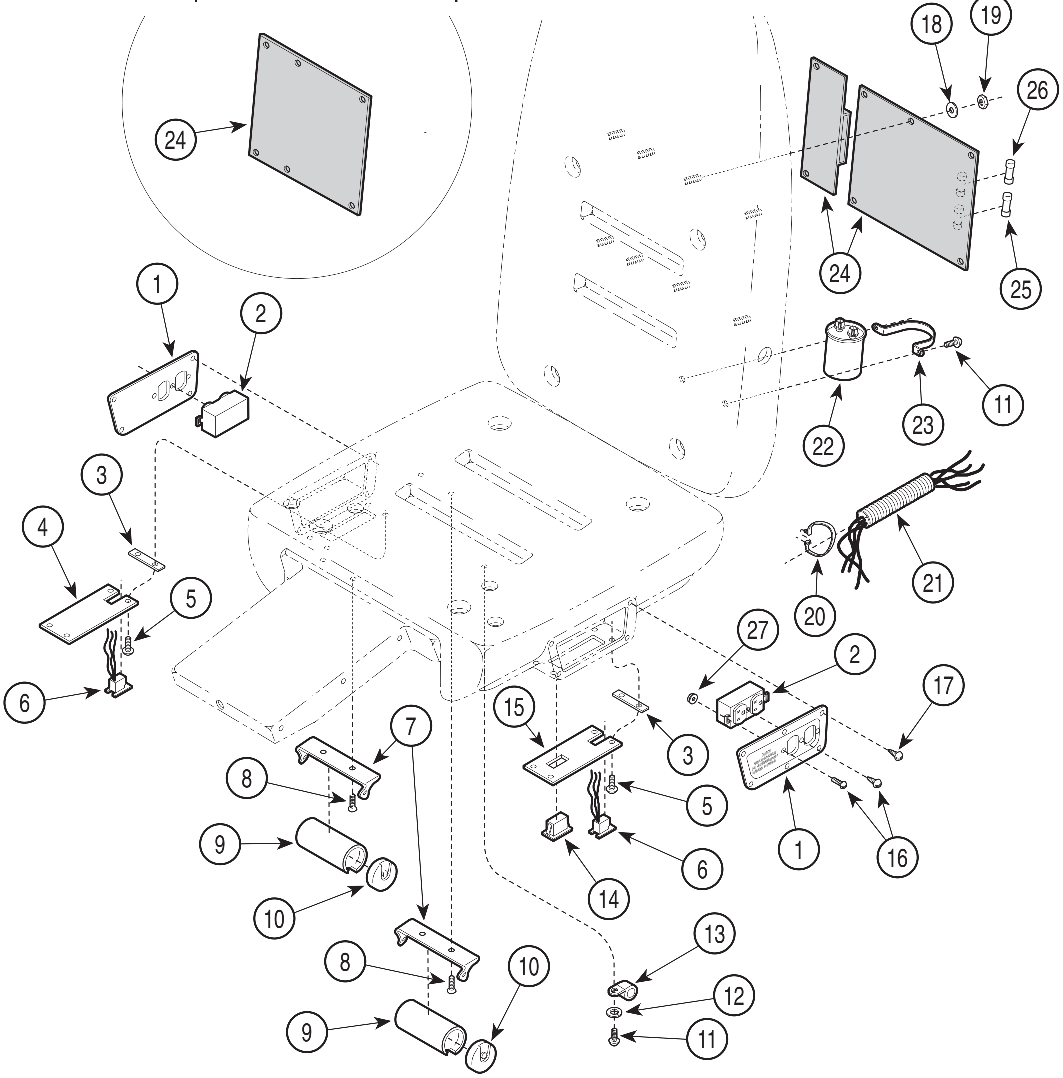

MA242401

Used on units with Serial Number BP1000 thru BP3337

Item	Part No.	Description	Qty.
1	053-0305-00	Receptacle Cover	2
2	015-0083-01	Receptacle	2
3	042-0089-00	Clip	2
4	050-1543-01	Control Cover (R.H.S.)	1
5	040-0006-00	Screw	8
6	015-0524-00	Handset Port w/Harness *(Refer to "Wiring Diagram" {Section 5})*	Ref
7	015-0412-00	Mounting Bracket	2
8	040-0010-62	Screw	4
9	015-0437-02	Capacitor	2
10	015-0413-00	Capacitor Cap	2
11	040-0010-42	Screw	3
12	045-0001-35	Lockwasher	1
13	015-0001-01	Wire Clip	1
14	015-0543-00	Switch	1
15	050-1543-00	Control Cover (L.H.S.)	1
16	040-0006-23	Screw	6
17	040-0006-47	Screw	12
18	045-0001-45	Lockwasher	9
19	041-0006-00	Nut	9
20	015-0013-00	Cable Tie - 7.250"	11
21	015-0684-00	Upper Chair Wiring Harness (Refer to "Wiring Diagram" {Section 5})	Ref
22	002-1058-00	Capacitor Replacement Kit *(includes new-style clamp)*	1
23	015-0461-01	Capacitor Clamp	1
24	002-0481-00	PC Board Replacement Kit	1
25	015-0346-06	Fuse: 20A *(for two-part PC board)*	1
26	015-0346-05	Fuse: 1/2 A *(for two-part PC board)*	1
27	041-0006-02	Nut w/ starwasher	2
28	015-0013-02	Cable Tie - 3.875" (Not Shown)	3

Always Specify Model & Serial Number
N.L.A. denotes 'No Longer Available'

Return To Table Of Contents

Upper Chair Electrical Components (Domestic)

NOTE: A smaller PC board is used in all replacement kits.
It is a direct replacement for the larger PC board.

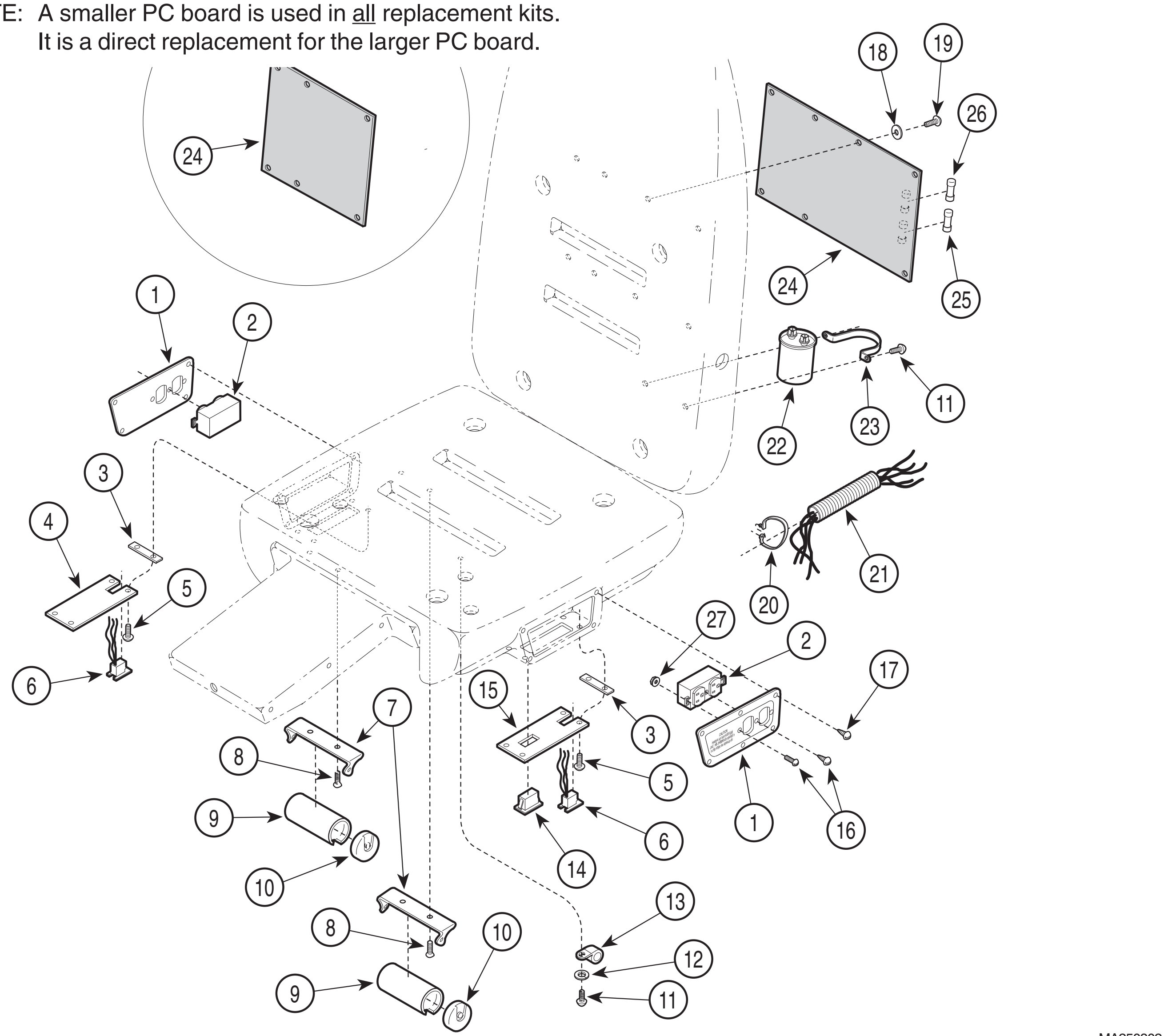

MA250802

Used on units with Serial Number BP3338 thru BP7554

Item	Part No.	Description	Qty.
1	053-0305-00	Receptacle Cover	2
2	015-0083-01	Receptacle	2
3	042-0089-00	Clip	2
4	050-1543-01	Control Cover (R.H.S.)	1
5	040-0006-00	Screw	8
6	015-0524-00	Handset Port w/Harness *(Refer to "Wiring Diagram" {Section 5})*	Ref
7	015-0412-00	Mounting Bracket	2
8	040-0010-62	Screw	4
9	015-0437-02	Capacitor	2
10	015-0413-00	Capacitor Cap	2
11	040-0010-42	Screw	3
12	045-0001-35	Lockwasher	1
13	015-0001-01	Wire Clip	1
14	015-0543-00	Switch	1
15	050-1543-00	Control Cover (L.H.S.)	1
16	040-0006-23	Screw	6
17	040-0006-47	Screw	12
18	045-0001-45	Lockwasher	9
19	041-0006-00	Nut	9
20	015-0013-00	Cable Tie - 7.250"	11
21	015-0992-00	Upper Chair Wiring Harness *(Refer to "Wiring Diagram" {Section 5})*	Ref
22	002-1058-00	Capacitor Replacement Kit *(includes new-style clamp)*	1
23	015-0461-01	Capacitor Clamp	1
24	002-0481-00	PC Board Replacement Kit	1
25	• 015-0346-22	• Fuse: 5A *(large board: qty: 4)*	3
26	• 015-0346-14	• Fuse: 1/8 A	1
27	041-0006-02	Nut w/ starwasher	2
28	015-0013-02	Cable Tie - 3.875" (Not Shown)	3

Always Specify Model & Serial Number
N.L.A. denotes 'No Longer Available'

Return To Table Of Contents

Upper Chair Electrical Components (Domestic)

NOTE: A smaller PC board is used in all replacement kits & newer tables. It is a direct replacement for the larger PC board

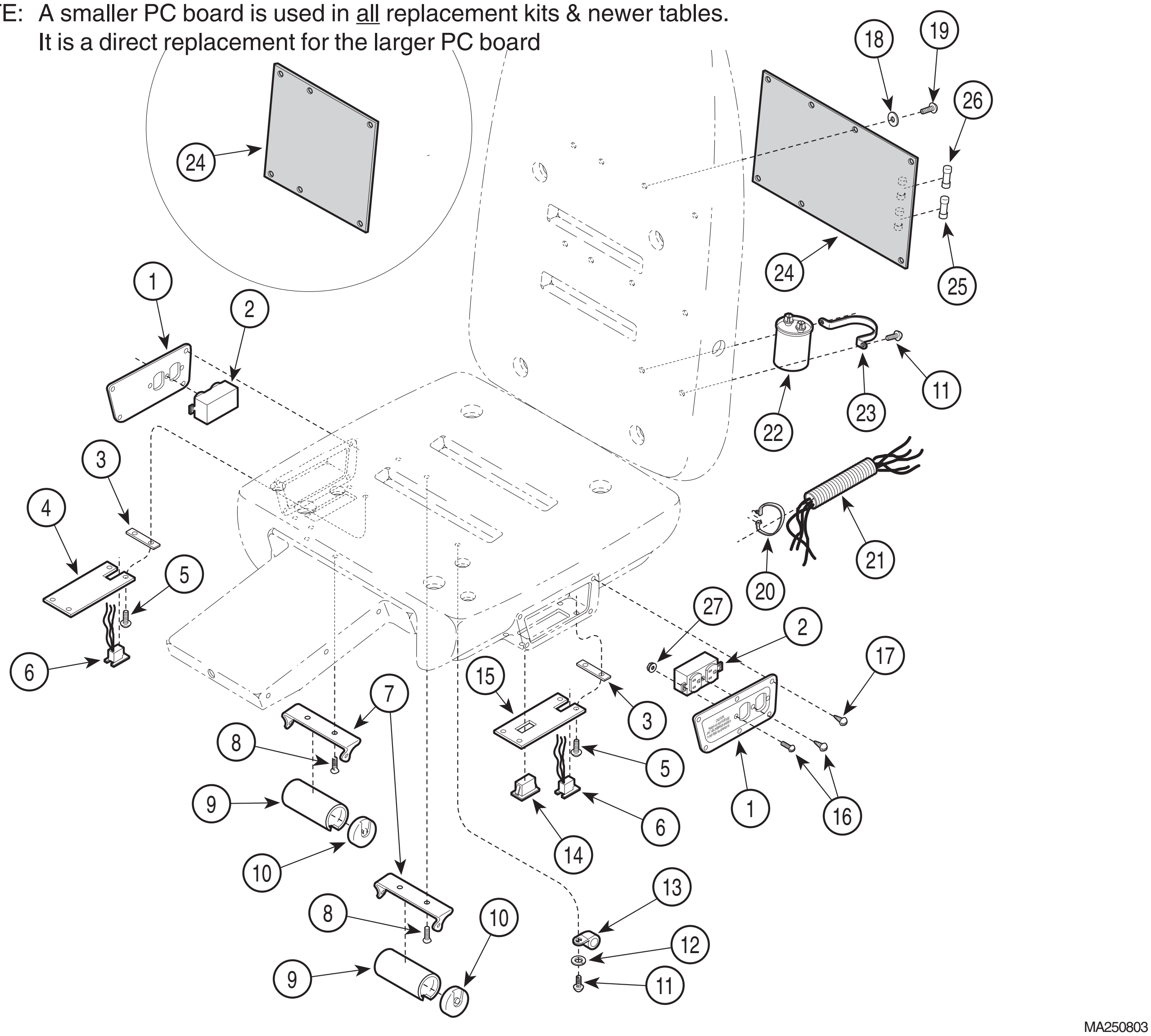

Used on units with Serial Number BP7555 thru Present
Used on units with Serial Number V2200 thru V428781

Item	Part No.	Description	Qty.
1	053-0305-00	Receptacle Cover	2
2	015-0083-01	Receptacle	2
3	042-0089-00	Clip	2
4	050-1543-01	Control Cover (R.H.S.)	1
5	040-0006-00	Screw	8
6	015-0524-00	Handset Port w/Harness *(Refer to "Wiring Diagram" {Section 5})*	Ref
7	015-0412-00	Mounting Bracket	2
8	040-0010-62	Screw	4
9	015-0437-02	Capacitor	2
10	015-0413-00	Capacitor Cap	2
11	040-0010-42	Screw	3
12	045-0001-35	Lockwasher	1
13	015-0001-01	Wire Clip	1
14	015-1587-00	Switch	1
15	050-1543-00	Control Cover (L.H.S.)	1
16	040-0006-23	Screw	6
17	040-0006-47	Screw	12
18	045-0001-45	Lockwasher *(large board: qty: 7)*	5
19	040-0006-93	Screw *(large board: qty: 7)*	5
20	015-0013-00	Cable Tie - 7.250"	11
21	015-0992-00	Upper Chair Wiring Harness (Refer to "Wiring Diagram" {Section 5})	Ref
22	002-1058-00	Capacitor Replacement Kit *(includes new-style clamp)*	1
23	015-0461-01	Capacitor Clamp	1
24	002-0481-00	PC Board Replacement Kit	1
25	• 015-0346-22	• Fuse: 5A *(large board: qty: 4)*	3
26	• 015-0346-14	• Fuse: 1/8 A	1
27	041-0006-02	Nut w/ starwasher	2
28	015-0013-02	Cable Tie - 3.875" *(not shown)*	3

Always Specify Model & Serial Number
N.L.A. denotes 'No Longer Available'

Upper Chair Electrical Components (Domestic)

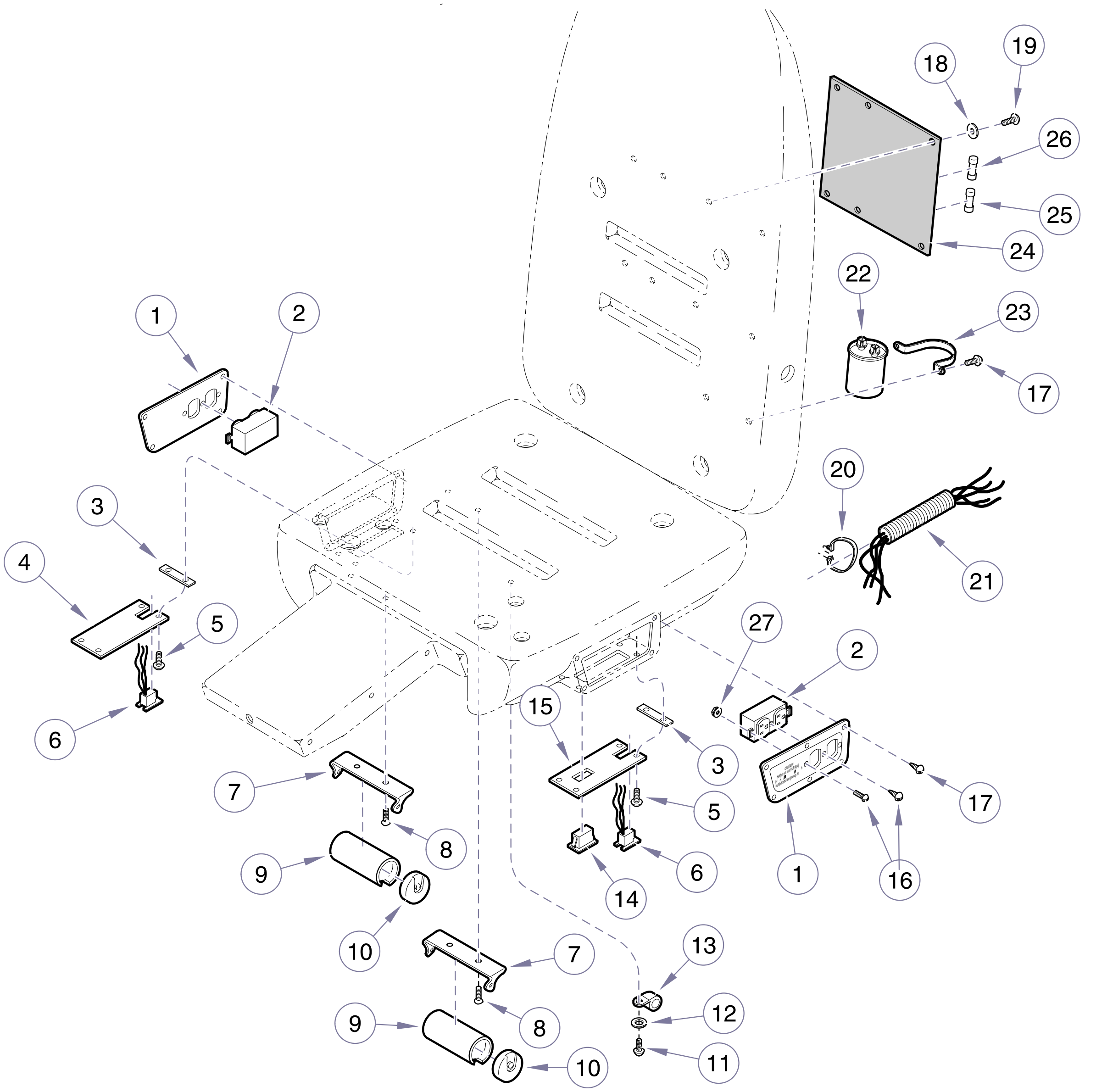

Used on units with Serial Number V428782 thru Present

Item	Part No.	Description	Qty.
1	053-0305-00	Receptacle Cover	2
2	015-0083-01	Receptacle	2
3	042-0089-00	Clip	2
4	050-1543-01	Control Cover (R.H.S.)	1
5	040-0006-00	Screw	8
6	015-0524-00	Handset Port w/Harness *(Refer to "Wiring Diagram" {Section 5})*	Ref
7	015-0412-00	Mounting Bracket	2
8	040-0010-62	Screw	4
9	015-0437-02	Capacitor	2
10	015-0413-00	Capacitor Cap	2
11	040-0010-42	Screw	3
12	045-0001-35	Lockwasher	1
13	015-0001-01	Wire Clip	1
14	015-1587-00	Switch	1
15	050-1543-00	Control Cover (L.H.S.)	1
16	040-0006-23	Screw	6
17	040-0006-47	Screw	12
18	045-0001-45	Lockwasher	5
19	040-0006-93	Screw	5
20	015-0013-00	Cable Tie - 7.250"	11
21	015-0992-00	Upper Chair Wiring Harness (Refer to "Wiring Diagram" {Section 5})	Ref
22	015-0438-06	Capacitor	1
23	015-0461-02	Capacitor Clamp	1
24	002-0481-00	PC Board Replacement Kit	1
25	• 015-0346-22	• Fuse: 5A	3
26	• 015-0346-14	• Fuse: 1/8 A	1
27	041-0006-02	Nut w/ starwasher	2
28	015-0013-02	Cable Tie - 3.875" *(not shown)*	3

Always Specify Model & Serial Number

Return To Table Of Contents

Upper Chair Electrical Components (Canadian)

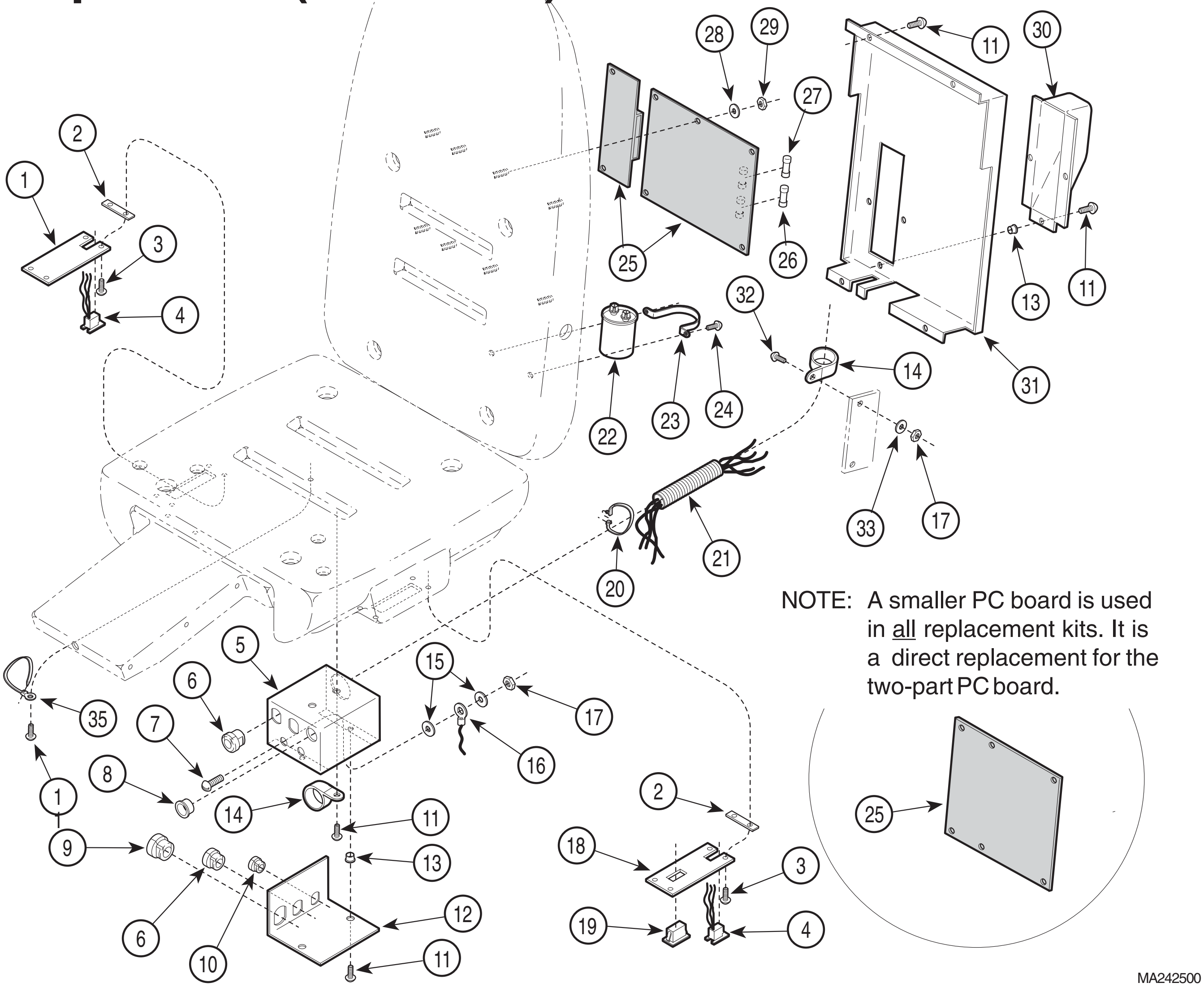

Used on units with Serial Number EP1000 thru EP1014

Item	Part No.	Description	Qty.
1	050-1543-01	Control Cover (R.H.S.)	1
2	042-0089-00	Clip	2
3	040-0006-00	Screw	8
4	015-0524-00	Handset Port w/Harness *(Refer to "Wiring Diagram" {Section 5})*	Ref
5	050-2648-10	Strain Relief Box	1
6	015-0002-08	Strain Relief	3
7	040-0010-46	Grounding Screw	2
8	053-0068-00	Snap Bushing	1
9	015-0002-01	Strain Relief	1
10	015-0002-03	Strain Relief	1
11	040-0010-47	Screw	13
12	050-2649-10	Strain Relief Box Cover	1
13	042-0045-01	Nutsert	5
14	015-0014-01	Clamp	2
15	045-0001-31	Lockwasher	4
16		Ground Lead Assembly (Refer to "Wiring Diagram" {Section 5})	Ref
17	041-0010-02	Nut	3
18	050-1543-00	Control Cover (L.H.S.)	1
19	015-0543-00	Switch	1
20	015-0013-00	Cable Tie - 7.250"	7
21	015-0944-00	Upper Chair Wiring Harness (Refer to "Wiring Diagram" {Section 5})	Ref
22	002-1058-00	Capacitor Replacement Kit *(includes new-style clamp)*	1
23	015-0461-01	Capacitor Clamp	1
24	040-0001-42	Screw	2
25	002-0481-01	PC Board Replacement Kit *(Canadian)*	1
26	015-0346-06	Fuse: 20A *(for two-part board)*	1
27	015-0346-05	Fuse: 1/2A *(for two-part board)*	1
28	045-0001-45	Lockwasher	7
29	041-0006-00	Nut	7
30	050-2647-10	Yoke Cover	1
31	050-2645-10	Back Cover	1
32	040-0010-23	Screw	1
33	045-0001-00	Lockwasher	1
34	015-0017-00	Ring Type Cable Tie - 7.500" (N. S.)	1
35	015-0013-02	Cable Tie - 3.875" (Not Shown)	2

Always Specify Model & Serial Number

Upper Chair Electrical Components (Canadian)

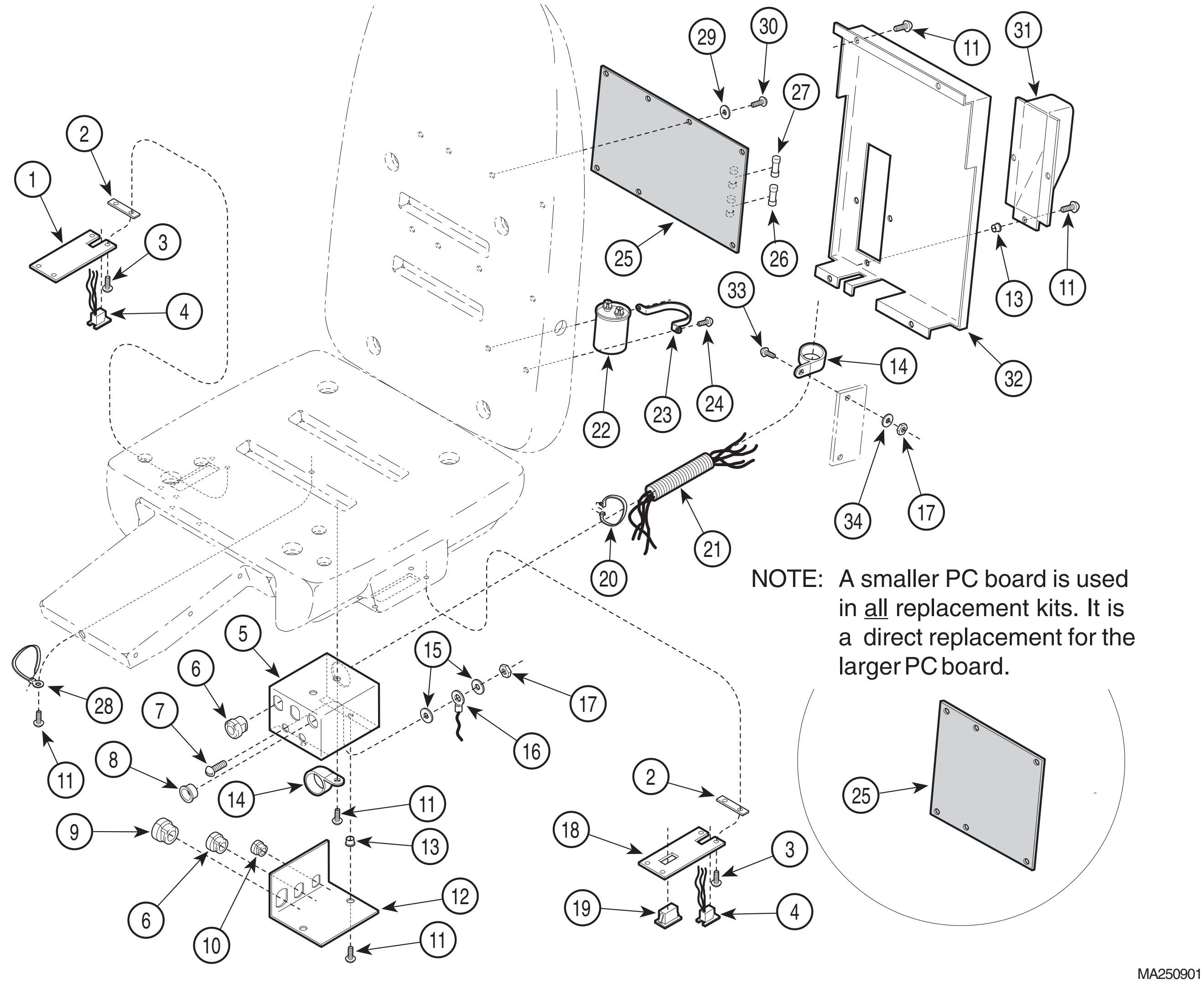

Used on units with Serial Number EP1015 thru EP1078

Item	Part No.	Description	Qty.	Item	Part No.	Description	Qty.
1	050-1543-01	Control Cover (R.H.S.)	1	19	015-0543-00	Switch	1
2	042-0089-00	Clip	2	20	015-0013-00	Cable Tie - 7.250"	7
3	040-0006-00	Screw	8	21	015-0991-00	Upper Chair Wiring Harness (Refer to "Wiring Diagram" {Section 5})	Ref
4	015-0524-00	Handset Port w/Harness *(Refer to "Wiring Diagram" {Section 5})*	Ref	22	002-1058-00	Capacitor Replacement Kit *(includes new-style clamp)*	1
5	050-2648-10	Strain Relief Box	1	23	015-0461-01	Capacitor Clamp	1
6	015-0002-08	Strain Relief	3	24	040-0001-42	Screw	2
7	040-0010-46	Grounding Screw	2	25	002-0481-01	PC Board Replacement Kit *(Canadian)*	1
8	053-0068-00	Snap Bushing	1	26	• 015-0346-22	• Fuse: 5A *(large board: qty: 4)*	3
9	015-0002-01	Strain Relief	1	27	• 015-0346-14	• Fuse: 1/8 A	1
10	015-0002-03	Strain Relief	1	28	015-0017-00	Ring Type Cable Tie - 7.500"	1
11	040-0010-47	Screw	13	29	045-0001-45	Lockwasher	7
12	050-2649-10	Strain Relief Box Cover	1	30	041-0006-00	Nut	7
13	042-0045-01	Nutsert	5	31	050-2647-10	Yoke Cover	1
14	015-0014-01	Clamp	2	32	050-2645-10	Back Cover	1
15	045-0001-31	Lockwasher	4	33	040-0010-23	Screw	1
16		Ground Lead Assembly (Refer to "Wiring Diagram" {Section 5})	Ref	34	045-0001-00	Lockwasher	4
17	041-0010-02	Nut	3	35	015-0013-02	Cable Tie - 3.875" (Not Shown)	2
18	050-1543-00	Control Cover (L.H.S.)	1				

Always Specify Model & Serial Number

Upper Chair Electrical Components (Canadian)

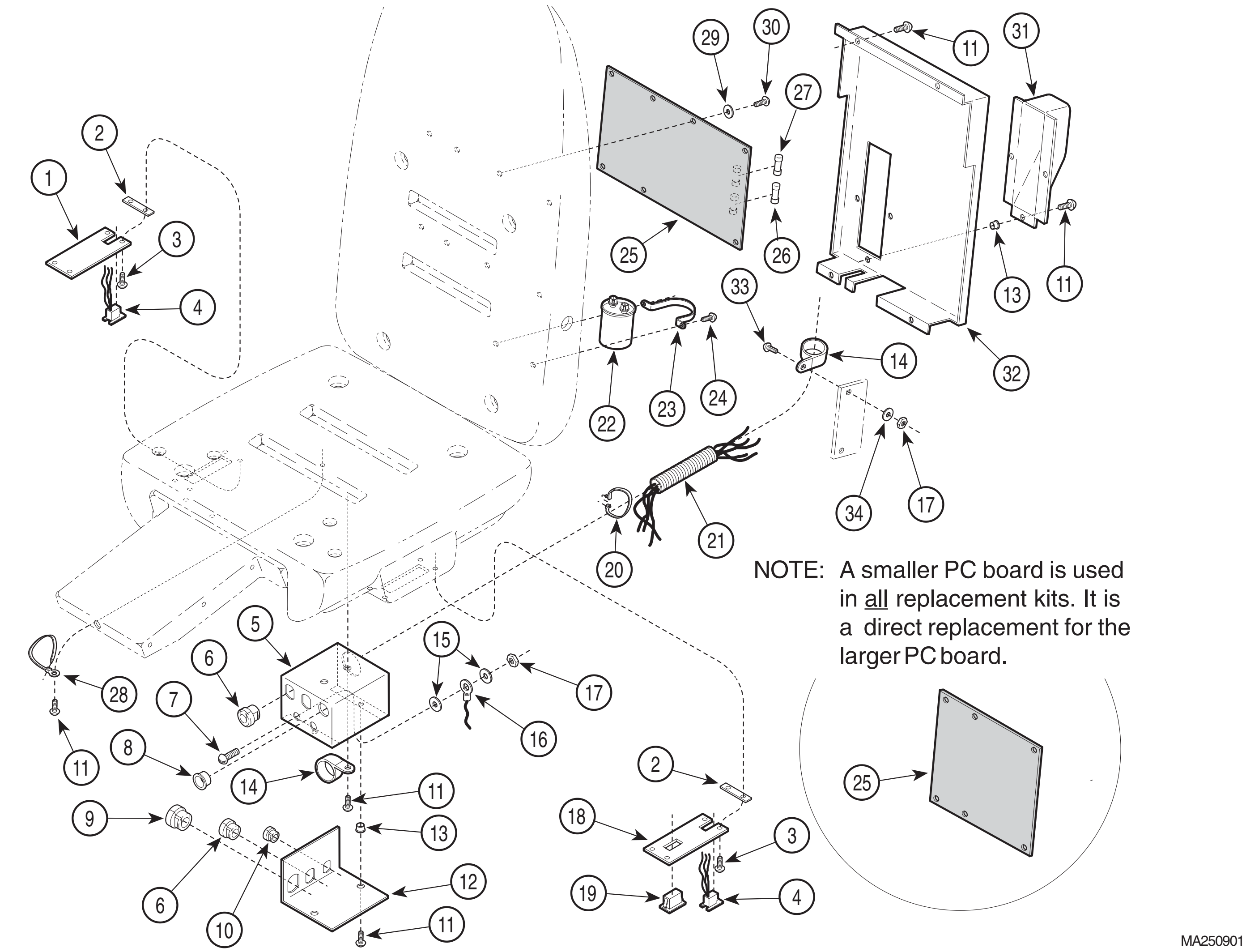

MA250901

Used on units with Serial Number EP1079 thru EP1114

Item	Part No.	Description	Qty.
1	050-1543-01	Control Cover (R.H.S.)	1
2	042-0089-00	Clip	2
3	040-0006-00	Screw	8
4	015-0524-00	Handset Port w/Harness *(Refer to "Wiring Diagram" {Section 5})*	Ref
5	050-4904-10	Strain Relief Box	1
6	015-0002-08	Strain Relief	2
7	040-0010-46	Grounding Screw	2
8	053-0068-00	Snap Bushing	1
9	015-0002-01	Strain Relief	2
10	015-0002-03	Strain Relief	1
11	040-0010-47	Screw	13
12	050-4905-10	Strain Relief Box Cover	1
13	042-0045-01	Nutsert	5
14	015-0014-01	Clamp	2
15	045-0001-31	Lockwasher	4
16		Ground Lead Assembly (Refer to "Wiring Diagram" {Section 5})	Ref
17	041-0010-02	Nut	3
18	050-1543-00	Control Cover (L.H.S.)	1
19	015-0543-00	Switch	1
20	015-0013-00	Cable Tie - 7.250"	7
21	015-0991-00	Upper Chair Wiring Harness (Refer to "Wiring Diagram" {Section 5})	Ref
22	002-1058-00	Capacitor Replacement Kit *(includes new-style clamp)*	1
23	015-0461-01	Capacitor Clamp	1
24	040-0001-42	Screw	2
25	002-0481-01	PC Board Replacement Kit *(Canadian)*	1
26	• 015-0346-22	• Fuse: 5A *(large board: qty: 4)*	3
27	• 015-0346-14	• Fuse: 1/8 A	1
28	015-0017-00	Ring Type Cable Tie - 7.500"	1
29	045-0001-45	Lockwasher	7
30	041-0006-00	Nut	7
31	050-2647-10	Yoke Cover	1
32	050-2645-10	Back Cover	1
33	040-0010-23	Screw	1
34	045-0001-00	Lockwasher	4
35	015-0013-02	Cable Tie - 3.875" (Not Shown)	2

Always Specify Model & Serial Number

Return To Table Of Contents

Upper Chair Electrical Components (Canadian)

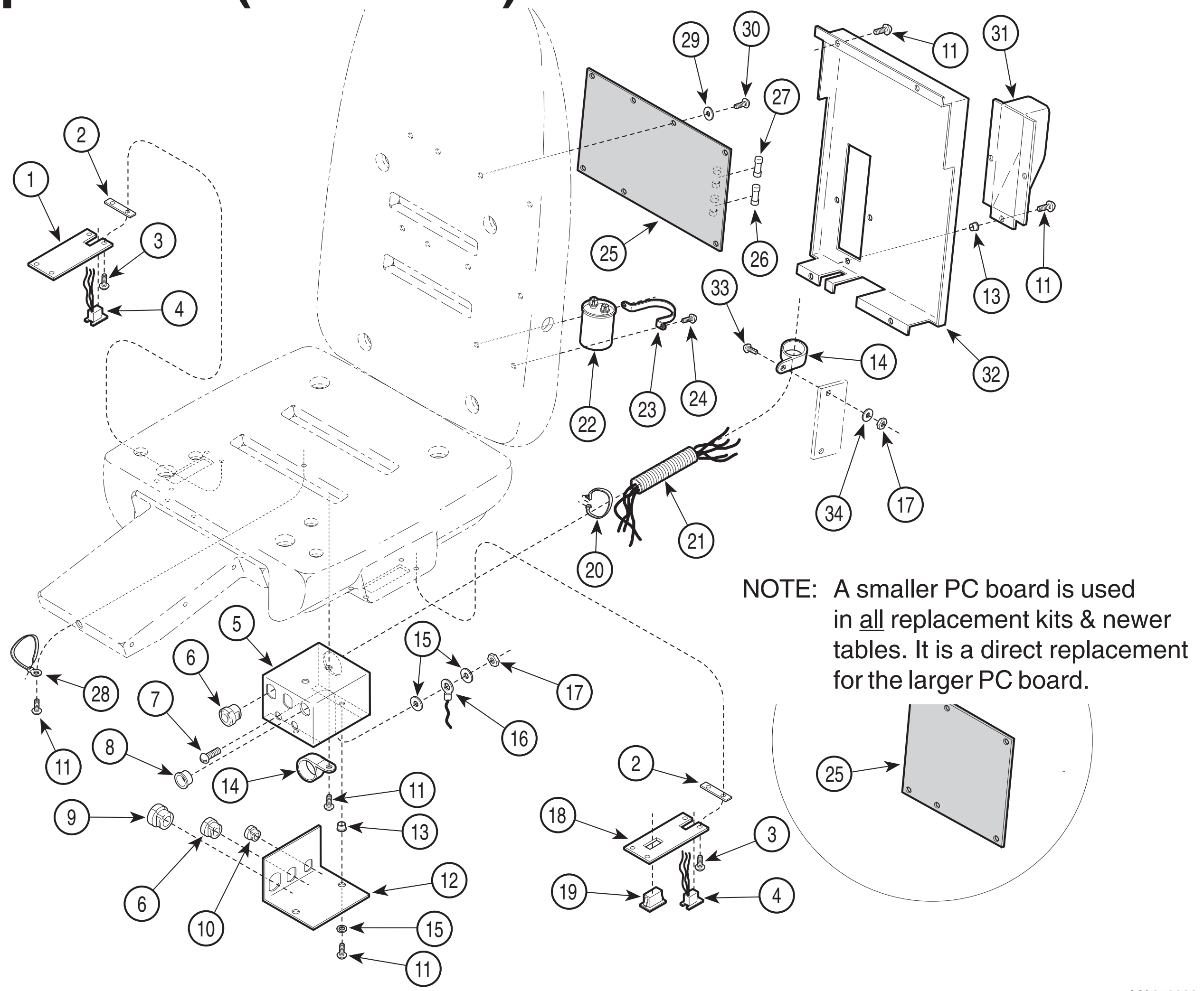

Used on units with Serial Number EP1115 thru Present
Used on units with Serial Number V2200 thru V428781

Item	Part No.	Description	Qty.
1	050-1543-01	Control Cover (R.H.S.)	1
2	042-0089-00	Clip	2
3	040-0006-00	Screw	8
4	015-0524-00	Handset Port w/Harness *(Refer to "Wiring Diagram" {Section 5})*	Ref
5	050-4904-10	Strain Relief Box	1
6	015-0002-08	Strain Relief	2
7	040-0010-46	Grounding Screw	2
8	053-0068-00	Snap Bushing	1
9	015-0002-01	Strain Relief	2
10	015-0002-03	Strain Relief	1
11	040-0010-47	Screw	13
12	050-4905-10	Strain Relief Box Cover	1
13	042-0045-01	Nutsert	5
14	015-0014-01	Clamp	2
15	045-0001-31	Lockwasher	6
16		Ground Lead Assembly (Refer to "Wiring Diagram" {Section 5})	Ref
17	041-0010-02	Nut	3
18	050-1543-00	Control Cover (L.H.S.)	1
19	015-1587-00	Switch	1
20	015-0013-00	Cable Tie - 7.250"	3
21	015-0991-00	Upper Chair Wiring Harness (Refer to "Wiring Diagram" {Section 5})	Ref
22	002-1058-00	Capacitor Replacement Kit *(includes new-style clamp)*	1
23	015-0461-01	Capacitor Clamp	1
24	040-0001-42	Screw	2
25	002-0481-01	PC Board Replacement Kit *(Canadian)*	1
26	• 015-0346-22	• Fuse: 5A *(large board: qty: 4)*	3
27	• 015-0346-14	• Fuse: 1/8 A	1
28	015-0017-00	Ring Type Cable Tie - 7.500"	1
29	045-0001-45	Lockwasher *(large board: qty: 7)*	5
30	040-0006-93	Screw *(large board: qty: 7)*	5
31	050-2647-10	Yoke Cover	1
32	050-2645-10	Back Cover	1
33	040-0010-23	Screw	1
34	045-0001-00	Lockwasher	4
35	015-0013-02	Cable Tie - 3.875" (Not Shown)	2

Always Specify Model & Serial Number

Upper Chair Electrical Components (Canadian)

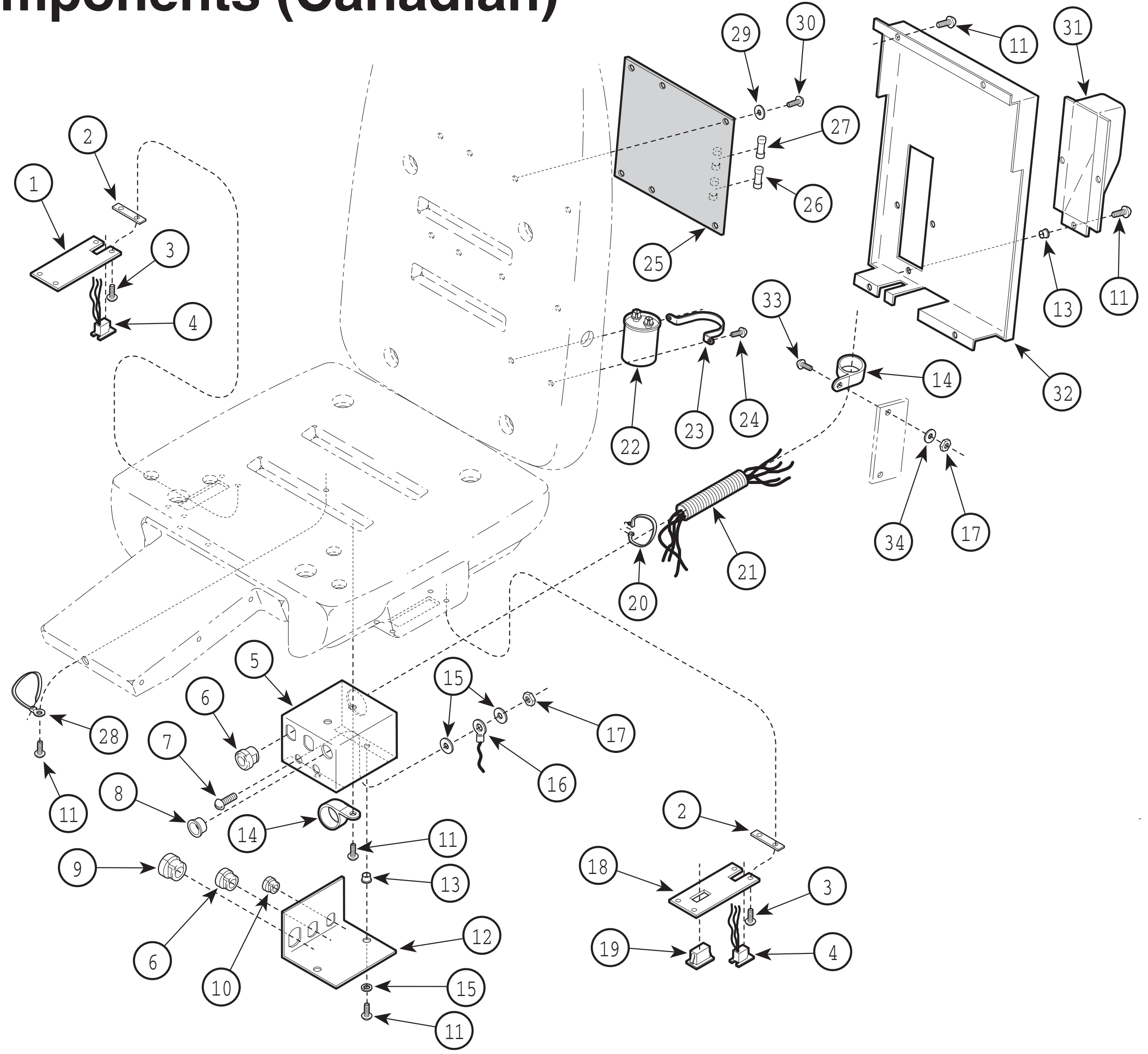

Used on units with Serial Number V428782 thru Present

Item	Part No.	Description	Qty.	Item	Part No.	Description	Qty.
1	050-1543-01	Control Cover (R.H.S.)	1	18	050-1543-00	Control Cover (L.H.S.)	1
2	042-0089-00	Clip	2	19	015-1587-00	Switch	1
3	040-0006-00	Screw	8	20	015-0013-00	Cable Tie - 7.250"	3
4	015-0524-00	Handset Port w/Harness *(Refer to "Wiring Diagram" {Section 5})*	Ref	21	015-0991-00	Upper Chair Wiring Harness (Refer to "Wiring Diagram" {Section 5})	Ref
5	050-4904-10	Strain Relief Box	1	22	015-0438-06	Capacitor	1
6	015-0002-08	Strain Relief	2	23	015-0461-02	Capacitor Clamp	1
7	040-0010-46	Grounding Screw	2	24	040-0001-42	Screw	2
8	053-0068-00	Snap Bushing	1	25	002-0481-01	PC Board Replacement Kit *(Canadian)*	1
9	015-0002-01	Strain Relief	2	26	• 015-0346-22	• Fuse: 5A	3
10	015-0002-03	Strain Relief	1	27	• 015-0346-14	• Fuse: 1/8 A	1
11	040-0010-47	Screw	13	28	015-0017-00	Ring Type Cable Tie - 7.500"	1
12	050-4905-10	Strain Relief Box Cover	1	29	045-0001-45	Lockwasher	5
13	042-0045-01	Nutsert	5	30	040-0006-93	Screw	5
14	015-0014-01	Clamp	2	31	050-2647-10	Yoke Cover	1
15	045-0001-31	Lockwasher	6	32	050-2645-10	Back Cover	1
16		Ground Lead Assembly (Refer to "Wiring Diagram" {Section 5})	Ref	33	040-0010-23	Screw	1
				34	045-0001-00	Lockwasher	4
17	041-0010-02	Nut	3	35	015-0013-02	Cable Tie - 3.875" (Not Shown)	2

Always Specify Model & Serial Number

Return To Table Of Contents

Lower Chair Electrical Components

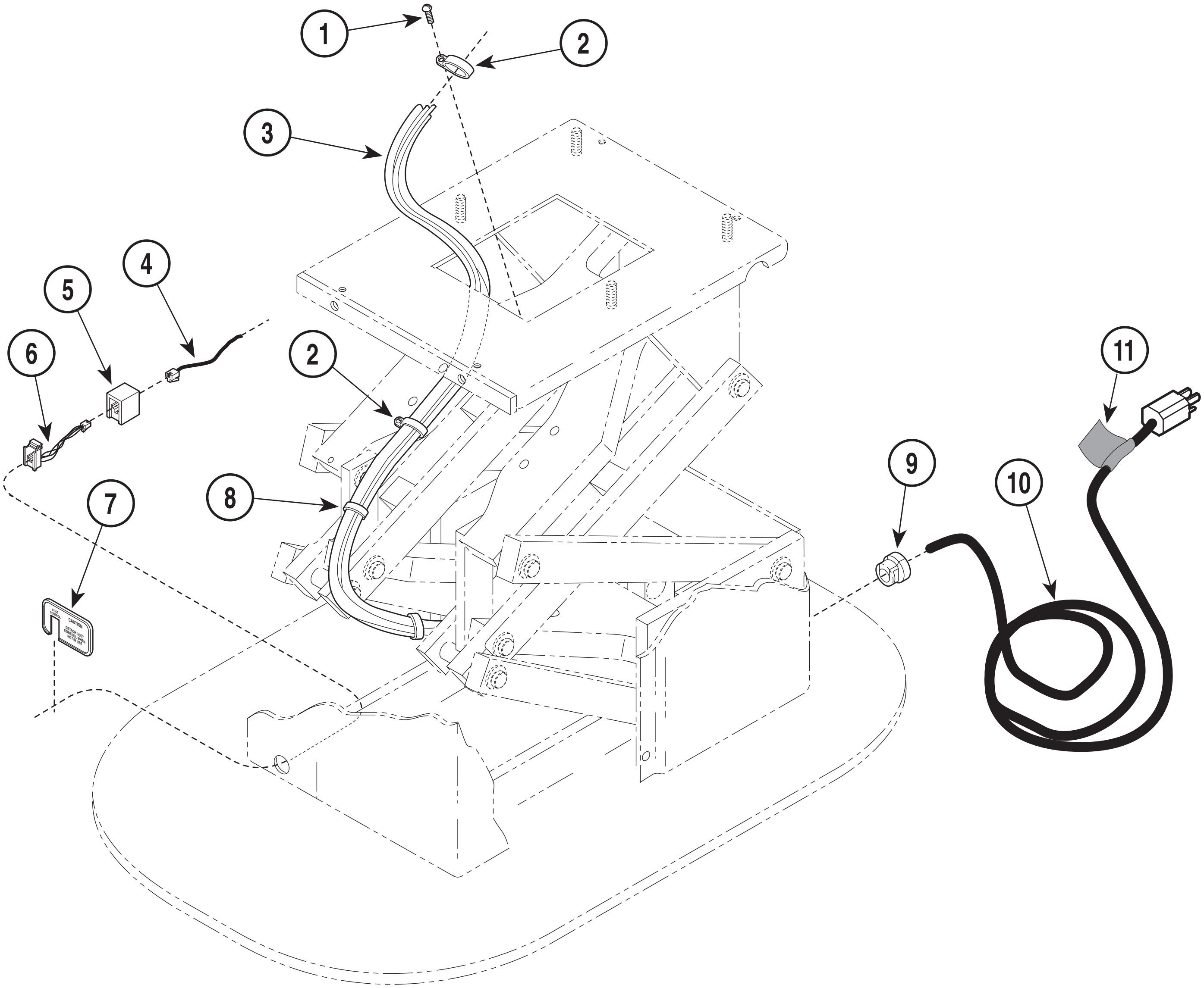

MA2432

Used on units with Serial Number BP1000 thru BP1363

Item	Part No.	Description	Qty.
1	040-0010-04	Screw	3
2	015-0001-01	Wire Clip	3
3		Wire Harness Assembly (Refer to "Wiring Diagram" {Section 5})	Ref
4	015-0535-04	Cord Set (Refer to "Wiring Diagram" {Section 5})	Ref
5	015-0540-00	Modular Coupler	1
6	015-0524-00	Jack Handset Harness (Refer to "Wiring Diagram" {Section 5})	Ref
7	053-0306-00	Foot Control Cover Plate	1
8	015-0013-02	Cable Tie	6
9	015-0002-01	Strain Relief Bushing	1
10	015-0066-11	Power Cord	1
11	061-0034-00	Power Tag (Shown on Power Cord, May Be Located on Base Weldment)	1

Always Specify Model & Serial Number

© Midmark 1994 SF-1399

Lower Chair Electrical Components

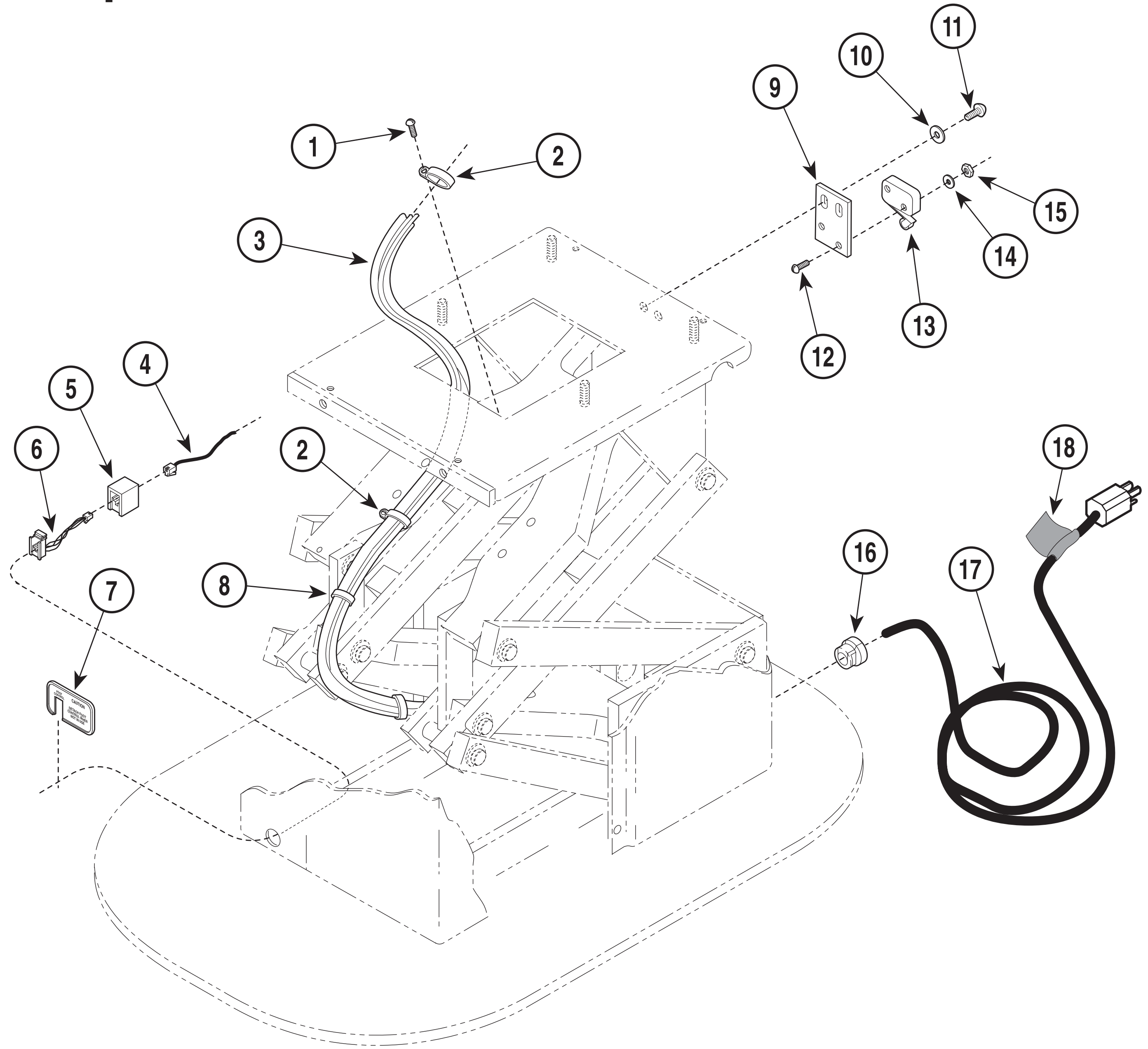

MA2433

Used on units with Serial Number BP1364 thru BP1504

Item	Part No.	Description	Qty.
1	040-0010-04	Screw	3
2	015-0001-01	Wire Clip	3
3		Wire Harness Assembly (Refer to "Wiring Diagram" {Section 5})	Ref
4	015-0535-04	Cord Set (Refer to "Wiring Diagram" {Section 5})	Ref
5	015-0540-00	Modular Coupler	1
6	015-0524-00	Jack Handset Harness (Refer to "Wiring Diagram" {Section 5})	Ref
7	053-0306-00	Foot Control Cover Plate	1
8	015-0013-02	Cable Tie	6
9	050-1858-00	Switch Mount	1
10	045-0001-08	Lockwasher	2
11	040-0010-00	Screw	2
12	040-0004-09	Screw	2
13	015-0635-00	Limit Switch	1
	002-0332-00	Limit Switch Update Kit	1
14	045-0001-38	Lockwasher	2
15	041-0004-01	Nut	2
16	015-0002-01	Strain Relief Bushing	1
17	015-0066-11	Power Cord	1
18	061-0034-00	Power Tag (Shown on Power Cord, May Be Located on Base Weldment)	1

Always Specify Model & Serial Number

© Midmark 1994 SF-1399

Return To Table Of Contents

Lower Chair Electrical Components

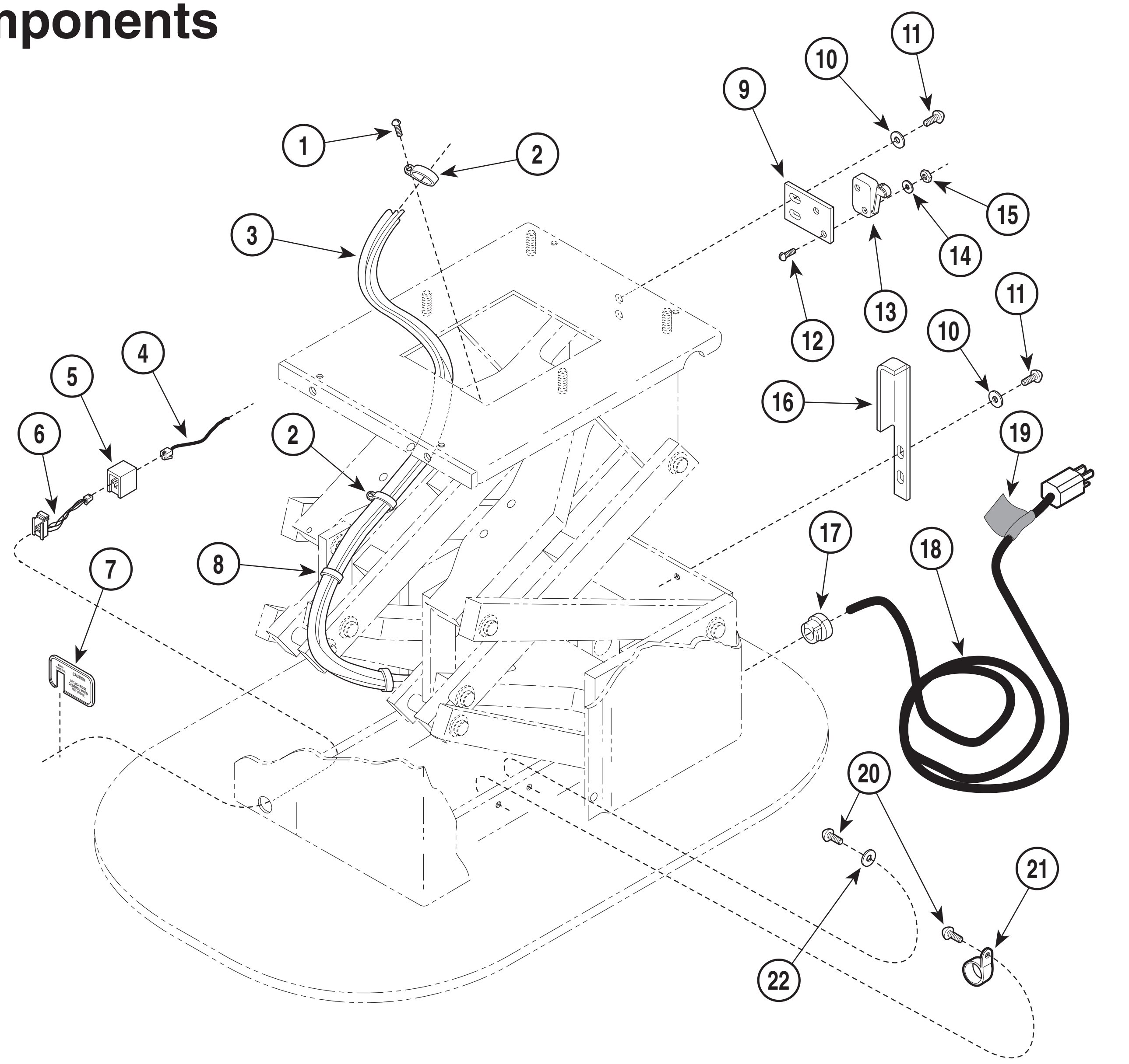

Used on units with Serial Number BP1505 thru BP6130, BP6132 thru BP6171 & EP1000 thru EF1078

Item	Part No.	Description	Qty.
1	040-0010-04	Screw	3
2	015-0001-01	Wire Clip	3
3		Wire Harness Assembly (Refer to "Wiring Diagram" {Section 5})	Ref
4	015-0535-04	Cord Set (Refer to "Wiring Diagram" {Section 5})	Ref
5	015-0540-00	Modular Coupler	1
6	015-0524-00	Jack Handset Harness (Refer to "Wiring Diagram" {Section 5})	Ref
7	053-0306-00	Foot Control Cover Plate	1
8	015-0013-02	Cable Tie - 3.875"	6
	015-0013-00	Cable Tie - 7.250" (Not Shown)	1
9	050-1858-00	Switch Mount	1
10	045-0001-08	Lockwasher	2
11	040-0010-00	Screw	2
12	040-0004-09	Screw	2
13	015-0635-00	Limit Switch	1
14	045-0001-38	Lockwasher	2
15	041-0004-01	Nut	2
16	050-1986-00	Bracket	1
17	015-0002-01	Strain Relief Bushing	1
18	015-0066-11	Power Cord (Domestic)	1
	015-0066-14	Power Cord (Canadian)	1
19	061-0034-00	Power Tag (Shown on Power Cord, May Be Located on Base Weldment)	1
20	040-0010-47	Screw (Canadian Units Only)	2
21	015-0001-01	Wire Clip (Canadian Units Only)	1
22	045-0001-31	Lockwasher (Canadian Units Only)	1

Always Specify Model & Serial Number

Return To Table Of Contents

Lower Chair Electrical Components

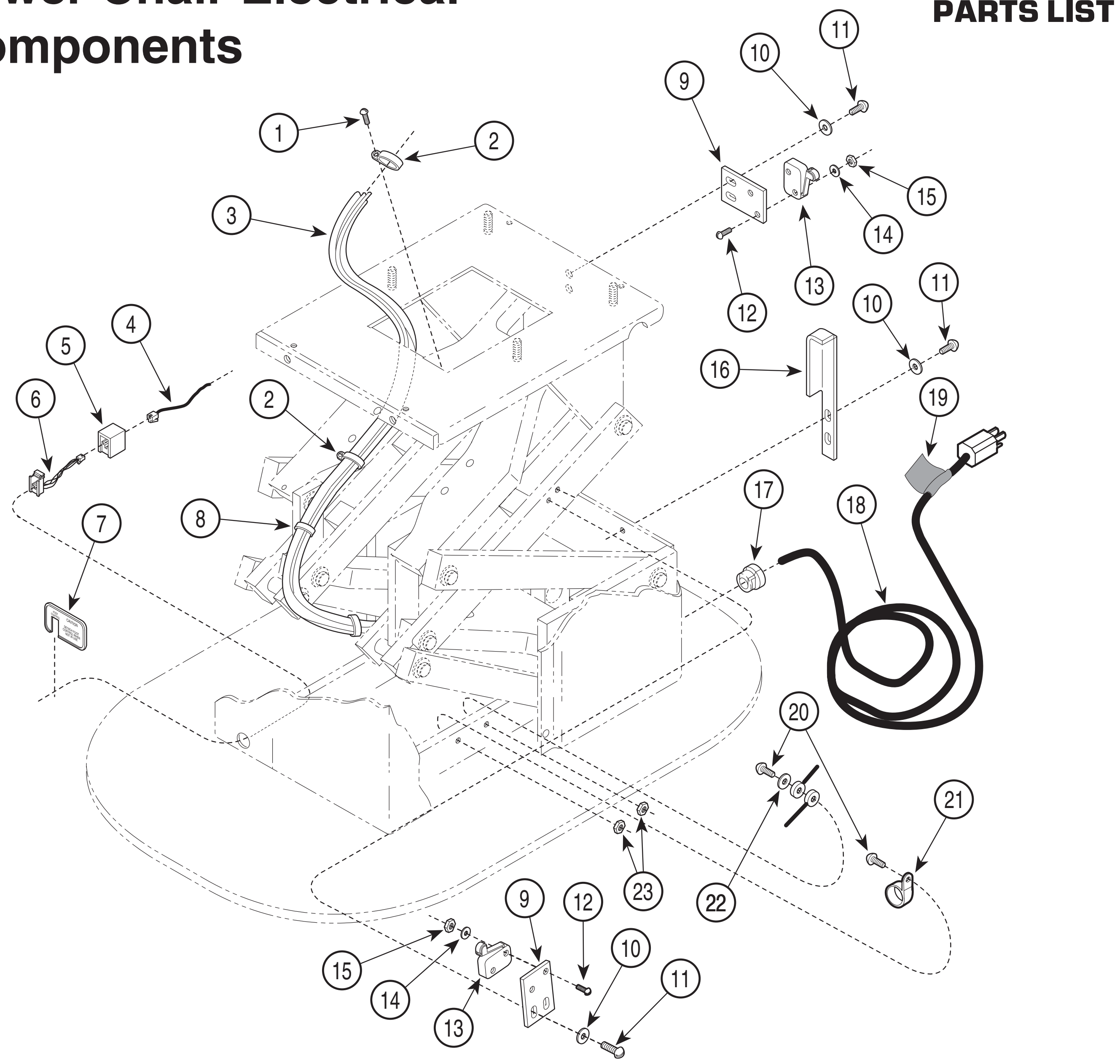

Used on units with Serial Number BP6131, BP6172, EP1079 thru Present
Used on units with Serial Number V2200 thru V107234

Item	Part No.	Description	Qty.
1	040-0010-04	Screw	3
2	015-0001-01	Wire Clip	3
3		Wire Harness Assembly (Refer to "Wiring Diagram" {Section 5})	Ref
4	015-0535-04	Cord Set (Refer to "Wiring Diagram" {Section 5})	Ref
5	015-0540-00	Modular Coupler	1
6	015-0524-00	Jack Handset Harness (Refer to "Wiring Diagram" {Section 5})	Ref
7	053-0306-00	Foot Control Cover Plate	1
8	015-0013-02	Cable Tie - 3.875"	6
	015-0013-00	Cable Tie - 7.250" (Not Shown)	1
9	050-1858-00	Switch Mount	2
10	045-0001-08	Lockwasher	4
11	040-0010-47	Screw	6
12	040-0004-09	Screw	4
13	015-0635-00	Limit Switch	2
14	045-0001-38	Lockwasher	4
15	041-0004-01	Nut	4
16	050-1986-00	Bracket	1
17	015-0002-01	Strain Relief Bushing	1
18	015-0066-11	Power Cord (Domestic)	1
	015-0066-14	Power Cord (Canadian)	1
19	061-0034-00	Power Tag (Shown on Power Cord, May Be Located on Base Weldment)	1
20	040-0010-51	Screw (Canadian Units Only)	2
21	015-0001-01	Wire Clip (Canadian Units Only)	1
22	045-0001-31	Lockwasher (Canadian Units Only)	1
23	041-0010-02	Nut (Canadian Units Only)	2

Always Specify Model & Serial Number

Lower Chair Electrical Components

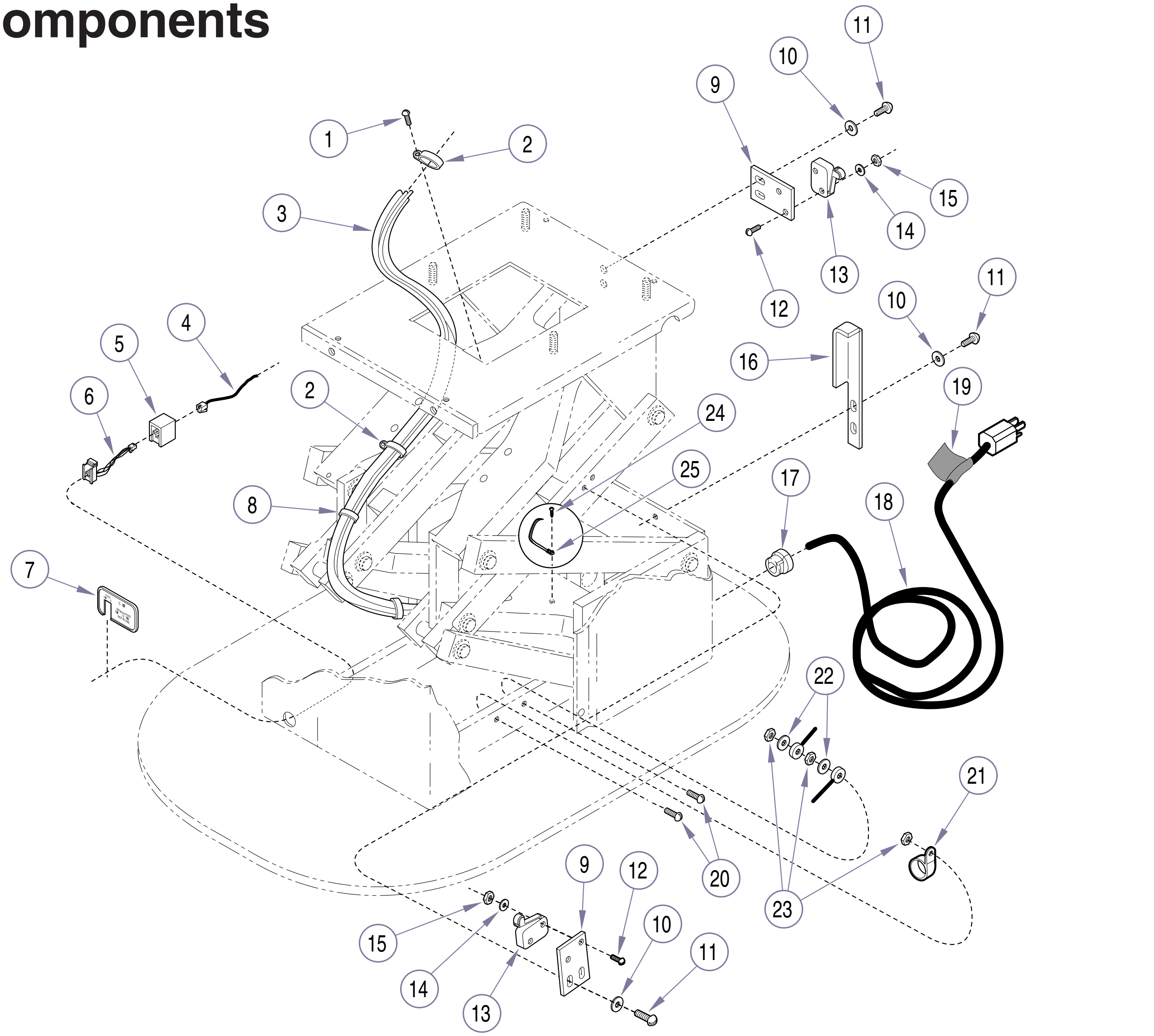

MA243004

Used on units with Serial Number V107235 thru Present

Item	Part No.	Description	Qty.
1	040-0010-04	Screw	3
2	015-0001-01	Wire Clip	3
3		Wire Harness Assembly (Refer to "Wiring Diagram" {Section 5})	Ref
4	015-0535-04	Cord Set (Refer to "Wiring Diagram" {Section 5})	Ref
5	015-0540-00	Modular Coupler	1
6	015-0524-00	Jack Handset Harness (Refer to "Wiring Diagram" {Section 5})	Ref
7	053-0306-00	Foot Control Cover Plate	1
8	015-0013-02	Cable Tie - 3.875"	6
	015-0013-00	Cable Tie - 7.250" (Not Shown)	1
9	050-1858-00	Switch Mount	2
10	045-0001-08	Lockwasher	4
11	040-0010-47	Screw	6
12	040-0004-09	Screw	4
13	015-0635-00	Limit Switch	2
14	045-0001-38	Lockwasher	4
15	041-0004-01	Nut	4
16	050-1986-00	Bracket	1
17	015-0002-01	Strain Relief Bushing	1
18	015-0066-11	Power Cord (Domestic)	1
	015-0066-14	Power Cord (Canadian)	1
19	061-0034-00	Power Tag (Shown on Power Cord, May Be Located on Base Weldment)	1
20	040-0010-51	Screw (Canadian Units Only)	2
21	015-0001-01	Wire Clip (Canadian Units Only)	1
22	045-0001-04	Lockwasher (Canadian Units Only)	2
23	041-0010-00	Nut (Canadian Units Only)	3
24	040-0010-47	Screw	1
25	015-0017-00	Cable Tie	1

Always Specify Model & Serial Number

Return To Table Of Contents

Power Base Assembly

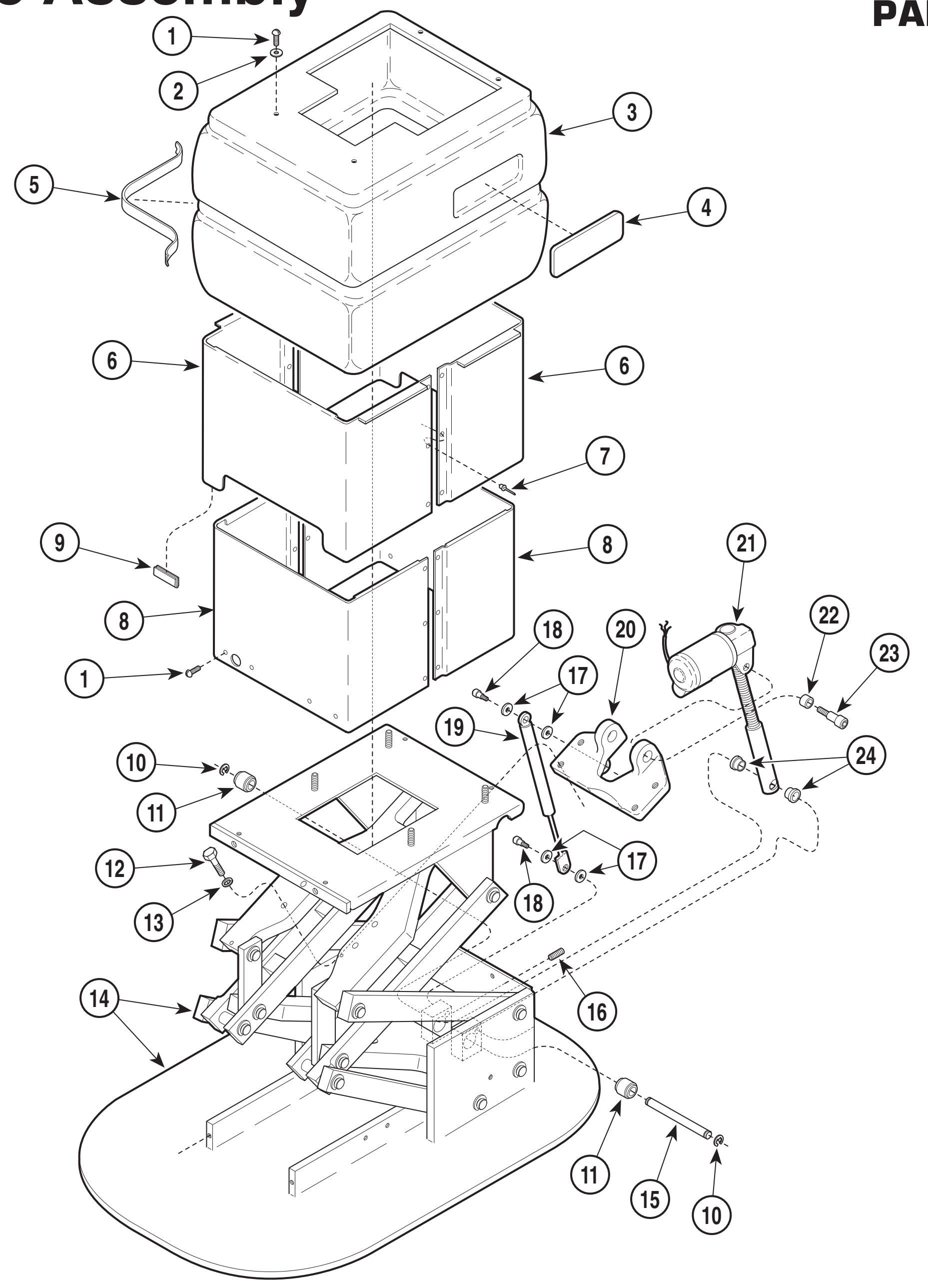

Used on units with Serial Number BP1000 thru BP1363

Item	Part No.	Description	Qty.
1	040-0010-04	Screw	8
2	045-0001-40	Washer	4
3	053-0291-00	Base Outer Shroud	1
4	053-0297-17	Nameplate (417)	2
5	053-0327-01	Base Shroud Stripe	1
6	050-1486-00	Outer Shroud	2
7	042-0010-03	Pop Rivet	12
8	050-1485-00	Inner Shroud	2
9	016-0140-05	Protective Trim (1 1/2")	4
10	042-0007-02	E-Ring	2
11	016-0346-00	Fabreeka Bushing	2
12	040-0375-36	Screw	4
13	045-0001-24	Lockwasher	4
14		Base Sub-Assembly (Refer to "Base Sub-Assembly" Elsewhere)	Ref
15	042-0048-07	Clevis Pin	1
16	040-0010-33	Set Screw	1
17	045-0001-49	Washer	4
18	042-0014-23	Shoulder Screw	2
19	016-0356-00	Gas Spring	1
20	020-0071-00	Actuator Bracket	1
21		Actuator Assembly (Refer to "Base Actuator Assembly" Elsewhere)	Ref
22	016-0149-02	Bronze Bearing	2
23	042-0014-15	Shoulder Screw (Apply Loctite #042-0024-00)	2
24	016-0131-09	Flanged Bearing	2

Always Specify Model & Serial Number

Return To Table Of Contents

Power Base Assembly

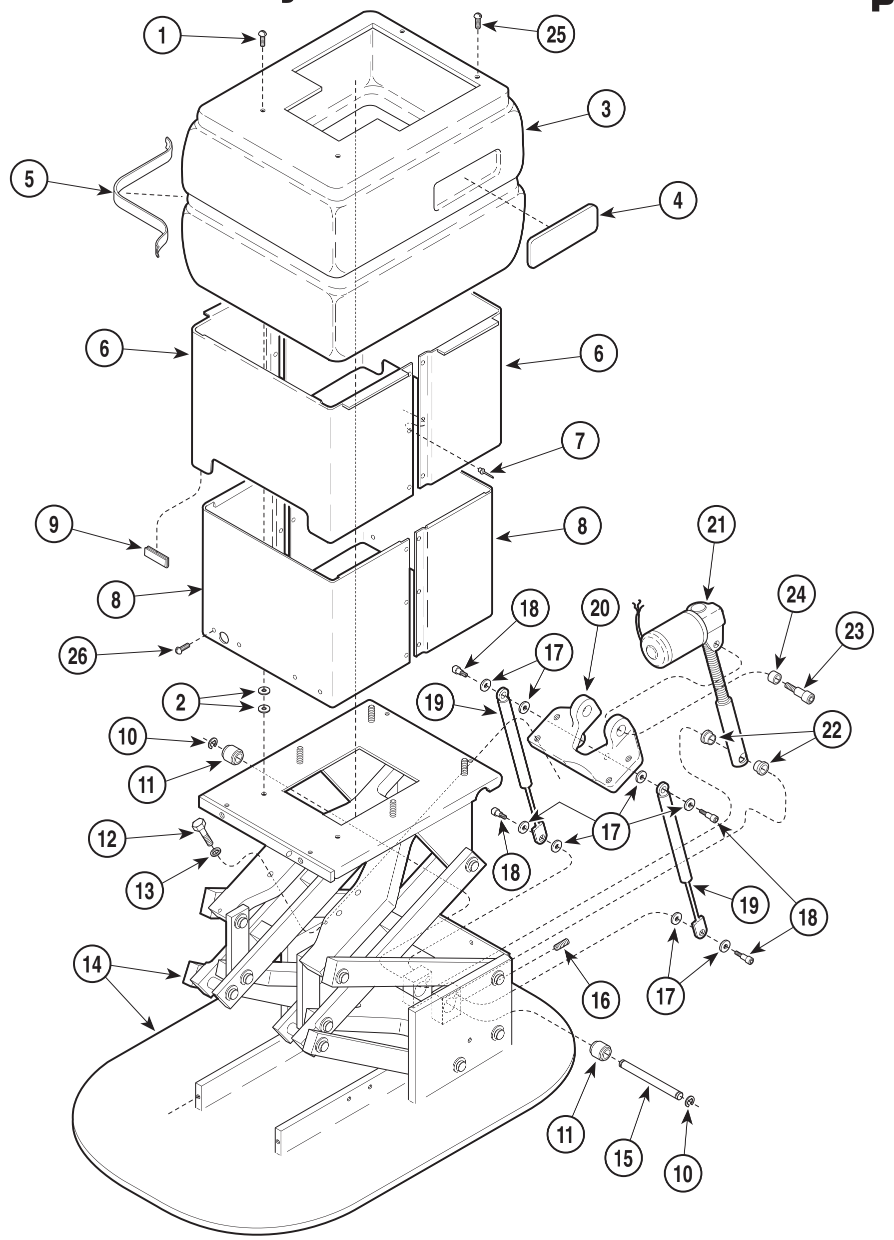

MA240001

Used on units with Serial Numbers: BP1364 thru Present, EP1000 thru Present, & V2200 thru V107234

Item	Part No.	Description	Qty.
1	040-0010-04	Screw	2
2	045-0001-40	Washer	4
3	053-0291-00	Base Outer Shroud	1
4	053-0297-17	Nameplate (417)	2
5	053-0327-01	Base Shroud Stripe	1
6	050-1486-00	Outer Shroud	2
7	042-0010-03	Pop Rivet	12
8	050-1485-00	Inner Shroud	2
9	016-0140-05	Protective Trim (1 1/2")	4
10	042-0007-02	E-Ring	2
11	016-0424-00	Silent-lign Bushing	2
12	040-0375-36	Screw	4
13	045-0001-24	Lockwasher	4
14		Base Sub-Assembly (Refer to "Base Sub-Assembly" Elsewhere)	Ref
15	042-0048-07	Clevis Pin	1
16	040-0010-33	Set Screw	2
17	045-0001-49	Washer	8
18	042-0014-23	Shoulder Screw	4
19	016-0356-00	Gas Spring	2
20	020-0071-00	Actuator Bracket	1
21		Actuator Assembly (Refer to "Base Actuator Assembly" Elsewhere)	Ref
22	016-0149-02	Bronze Bearing	2
23	042-0014-15	Shoulder Screw (Apply Loctite #042-0024-00)	2
24	016-0131-09	Flanged Bearing	2
25	040-0010-35	Screw	2
26	040-0010-47	Screw	11

Always Specify Model & Serial Number

Power Base Assembly

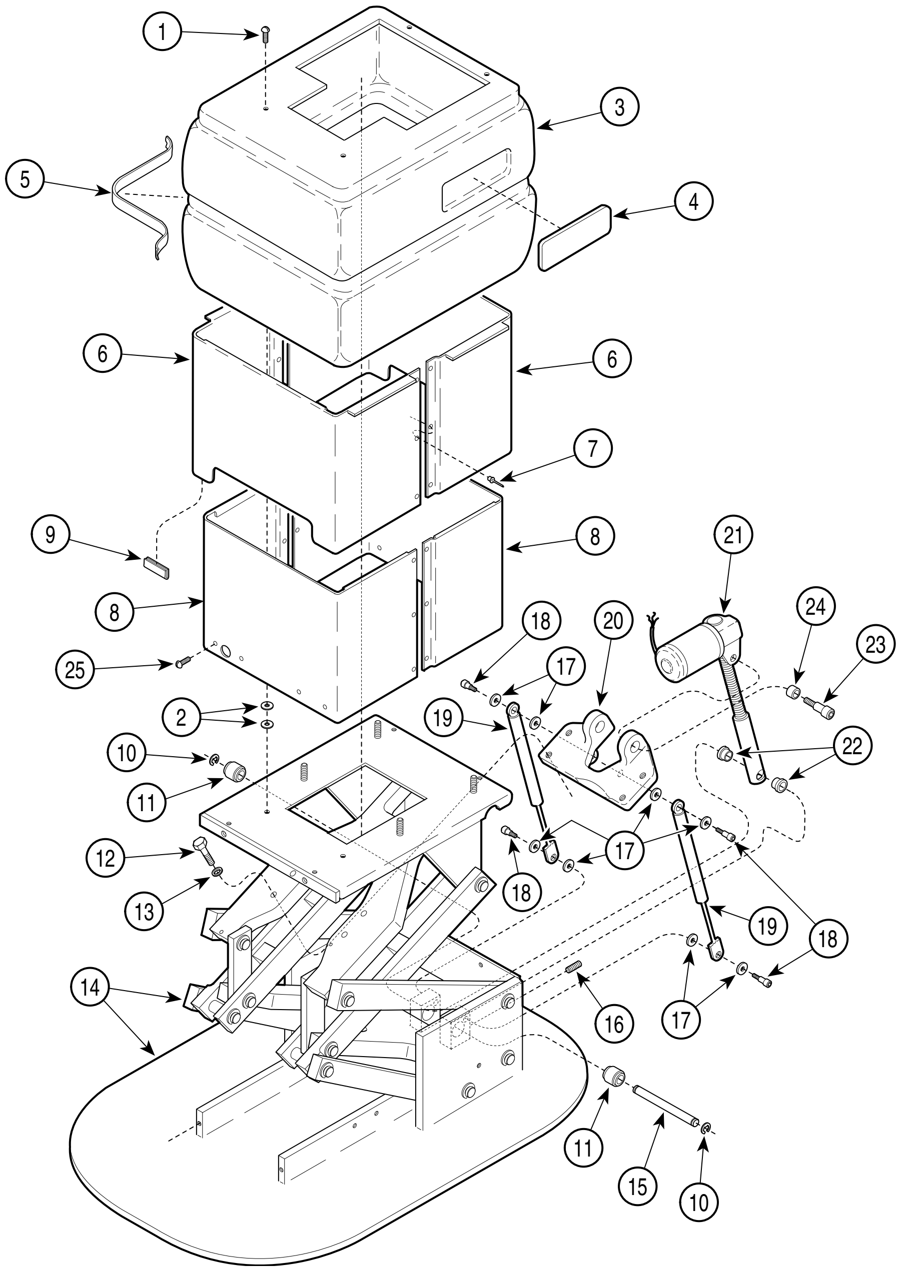

Used on units with Serial Numbers V107235 thru Present

Item	Part No.	Description	Qty.
1	040-0010-04	Screw	2
2	045-0001-40	Washer	4
3	053-1563-00-253	Base Outer Shroud	1
4	053-0297-17	Nameplate (417)	2
5	053-0327-01	Base Shroud Stripe	1
6	050-1486-00	Outer Shroud	2
7	042-0010-03	Pop Rivet	12
8	050-1485-00	Inner Shroud	2
9	016-0140-05	Protective Trim (1 1/2")	4
10	042-0007-02	E-Ring	2
11	016-0424-00	Silent-lign Bushing	2
12	040-0375-36	Screw	4
13	045-0001-24	Lockwasher	4
14		Refer to "Base Sub-Assembly"	Ref
15	042-0048-07	Clevis Pin	1
16	040-0010-33	Set Screw	2
17	045-0001-49	Washer	8
18	042-0014-23	Shoulder Screw	4
19	016-0356-00	Gas Spring	2
20	020-0071-00	Actuator Bracket	1
21		Refer to "Base Actuator Assembly"	Ref
22	016-0131-09	Flanged Bearing	2
23	042-0014-15	Shoulder Screw (Apply Loctite #042-0024-00)	2
24	016-0149-02	Bronze Bearing	2
25	040-0010-47	Screw	11

Always Specify Model & Serial Number

Return To Table Of Contents

Base Sub-Assembly

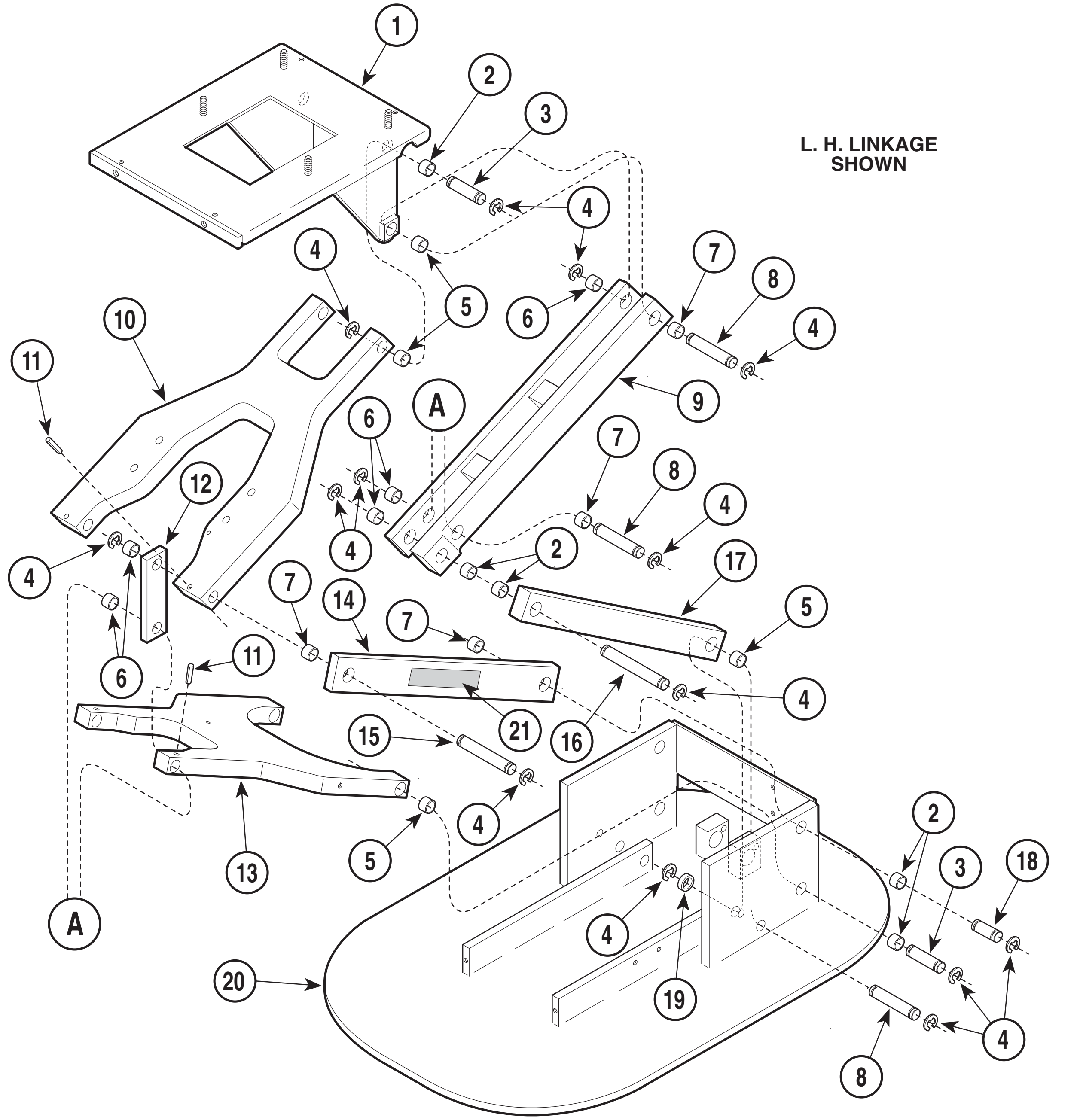

Used on units with Serial Number BP1000 thru BP1553

Item	Part No.	Description	Qty.
		Base Sub-Assembly (Includes Items 1 thru 21)	1
1	• 030-0764-01	• Base Mounting Plate Weldment	1
2	• 016-0076-10	• DU Bearing	12
3	• 057-0218-01	• Clevis Pin	4
4	• 042-0007-06	• E-Ring	32
5	• 016-0076-11	• DU Bearing	6
6	• 016-0076-02	• DU Bearing	10
7	• 016-0076-09	• DU Bearing	8
8	• 057-0218-02	• Clevis Pin	6
9	• 030-0745-00	• Connecting Bar Weldment	2
10	• 050-1582-00	• Upper Plate	1
11	• 042-0001-00	• Roll Pin	4
12	• 051-0518-00	• Connect Bar	2
13	• 050-1581-00	• Lower Plate	1
14	• 051-0519-00	• Lower Bar	2
15	• 057-0218-03	• Clevis Pin	2
16	• 057-0218-04	• Clevis Pin	2
17	• 051-0521-00	• Control Bar	2
18	• 057-0218-00	• Clevis Pin	2
19	• 052-0144-00	• Spacer	2
20	• 030-0524-00	• Base Weldment	1
21	• 061-0045-00	• Caution Label	2

Always Specify Model & Serial Number

Return To Table Of Contents

Base Sub-Assembly

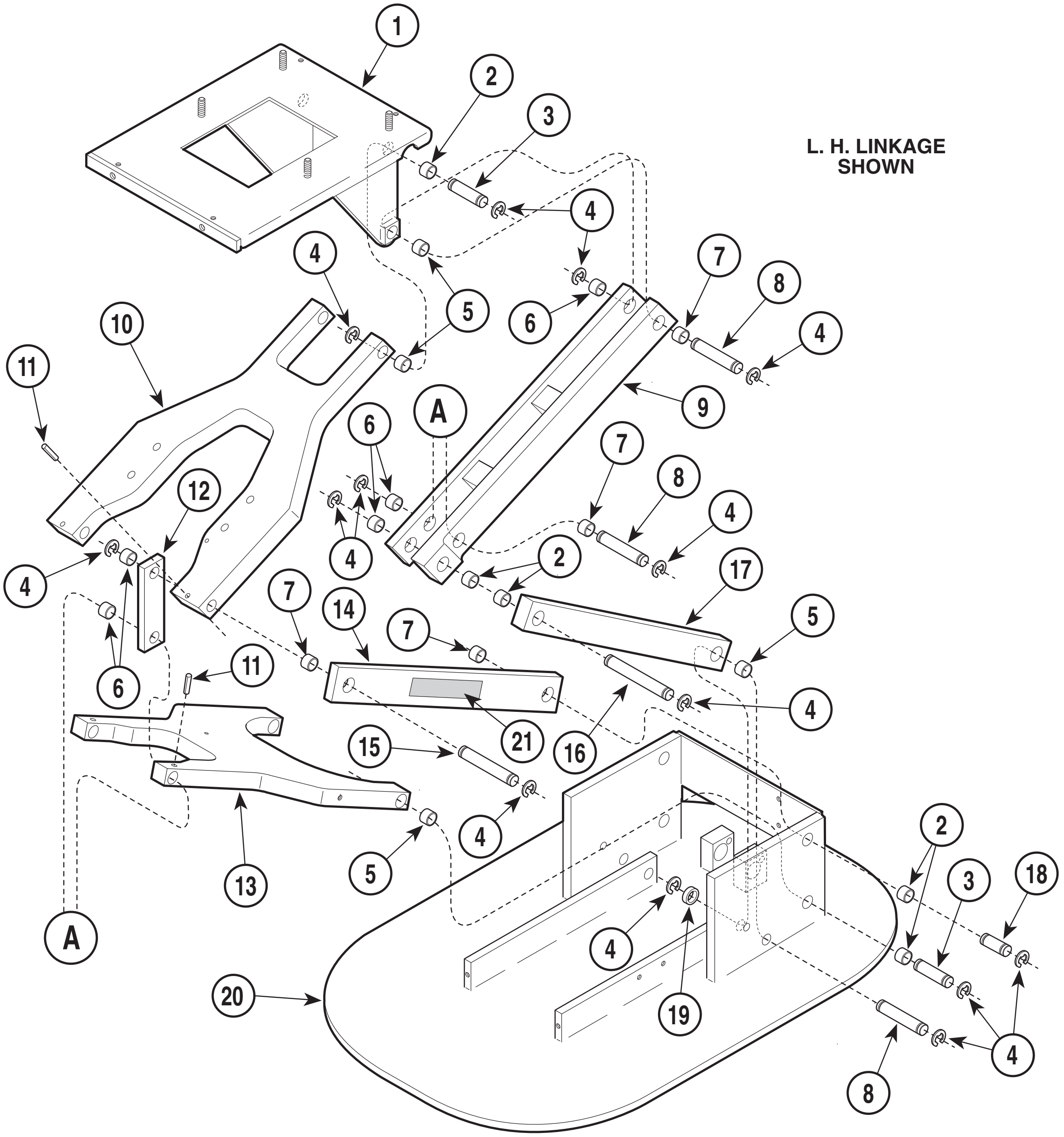

Used on units with Serial Number BP7954 and EP1131 thru Present
Used on units with Serial Number V2200 thru Present

Item	Part No.	Description	Qty.
		Base Sub-Assembly (Includes Items 1 thru 21)	1
1	• 030-0764-01	• Base Mounting Plate Weldment	1
2	• 016-0076-10	• DU Bearing	12
3	• 057-0218-01	• Clevis Pin	4
4	• 042-0007-06	• E-Ring	32
5	• 016-0076-11	• DU Bearing	6
6	• 016-0076-02	• DU Bearing	10
7	• 016-0076-09	• DU Bearing	8
8	• 057-0218-02	• Clevis Pin	6
9	• 030-1274-00	• Connecting Bar Weldment	2
10	• 050-1582-00	• Upper Plate	1
11	• 042-0001-00	• Roll Pin	4
12	• 051-0518-00	• Connect Bar	2
13	• 050-1581-00	• Lower Plate	1
14	• 051-0519-00	• Lower Bar	2
15	• 057-0218-03	• Clevis Pin	2
16	• 057-0218-04	• Clevis Pin	2
17	• 051-0521-00	• Control Bar	2
18	• 057-0218-00	• Clevis Pin	2
19	• 052-0144-00	• Spacer	2
20	• 030-0927-00	• Base Weldment	1
21	• 061-0045-00	• Caution Label	2

Always Specify Model & Serial Number

Base Sub-Assembly

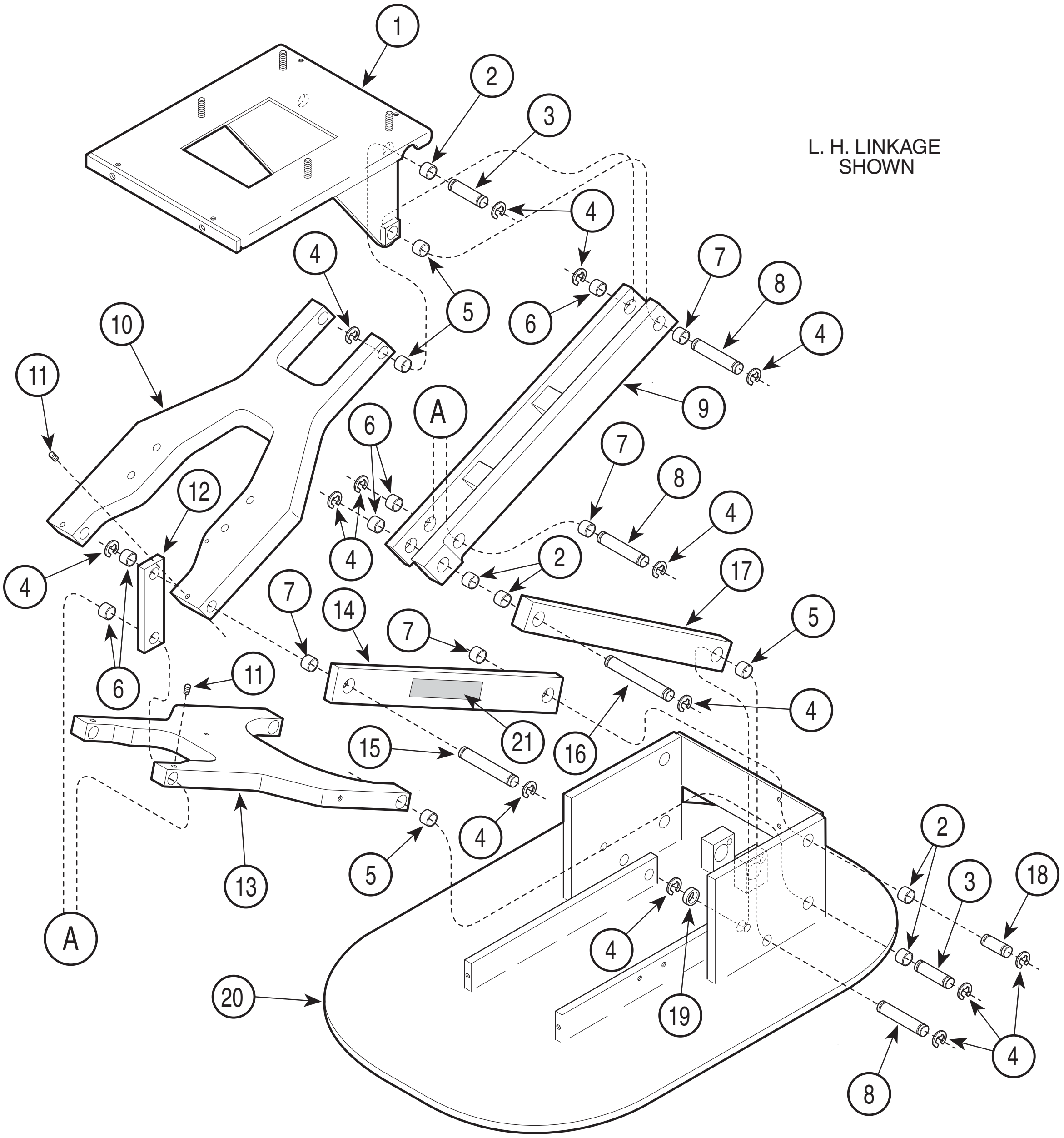

Used on units with Serial Numbers: BP7955 & EP1132 thru Present, & V2200 thru V107234

Item	Part No.	Description	Qty.
		Base Sub-Assembly (Includes Items 1 thru 21)	1
1	• 030-0764-01	• Base Mounting Plate Weldment	1
2	• 016-0076-10	• DU Bearing	12
3	• 057-0218-01	• Clevis Pin	4
4	• 042-0007-06	• E-Ring	32
5	• 016-0076-11	• DU Bearing	6
6	• 016-0076-02	• DU Bearing	10
7	• 016-0076-09	• DU Bearing	8
8	• 057-0218-02	• Clevis Pin	6
9	• 030-1274-00	• Connecting Bar Weldment	2
10	• 050-1582-03	• Upper Plate	1
11	• 040-0250-04	• Set Screw	4
12	• 051-0518-00	• Connect Bar	2
13	• 050-1581-03	• Lower Plate	1
14	• 051-0519-00	• Lower Bar	2
15	• 057-0218-03	• Clevis Pin	2
16	• 057-0218-04	• Clevis Pin	2
17	• 051-0521-00	• Control Bar	2
18	• 057-0218-00	• Clevis Pin	2
19	• 052-0144-00	• Spacer	2
20	• 030-0927-00	• Base Weldment	1
21	• 061-0045-00	• Caution Label	2

Always Specify Model & Serial Number

Return To Table Of Contents

Base Sub-Assembly

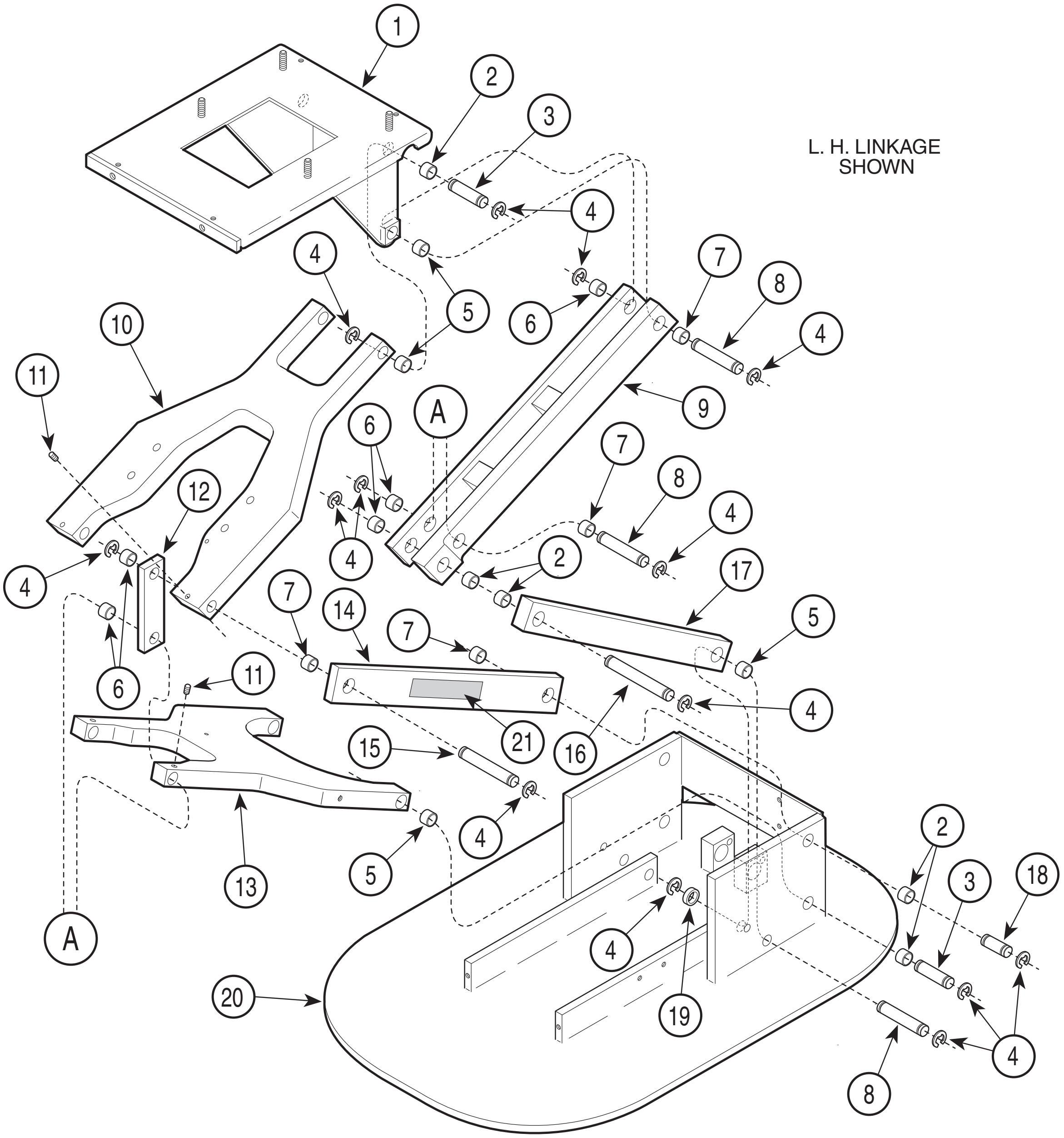

Used on units with Serial Numbers V107235 thru Present

Item	Part No.	Description	Qty.
		Base Sub-Assembly *(includes items 1 thru 21)*	1
1	• 030-1575-00-312	• Base Mounting Plate Weldment	1
2	• 016-0076-10	• DU Bearing	12
3	• 057-0218-01	• Clevis Pin	4
4	• 042-0007-06	• E-Ring	32
5	• 016-0076-11	• DU Bearing	6
6	• 016-0076-02	• DU Bearing	10
7	• 016-0076-09	• DU Bearing	8
8	• 057-0218-02	• Clevis Pin	6
9	• 030-1274-00	• Connecting Bar Weldment	2
10	• 050-1582-03	• Upper Plate	1
11	• 040-0250-04	• Set Screw	4
12	• 051-0518-00	• Connect Bar	2
13	• 050-1581-03	• Lower Plate	1
14	• 051-0519-00	• Lower Bar	2
15	• 057-0218-03	• Clevis Pin	2
16	• 057-0218-04	• Clevis Pin	2
17	• 051-0521-00	• Control Bar	2
18	• 057-0218-00	• Clevis Pin	2
19	• 052-0144-00	• Spacer	2
20	• 030-0927-00	• Base Weldment	1
21	• 061-0045-00	• Caution Label	2

Always Specify Model & Serial Number

Return To Table Of Contents

Base Actuator Assembly

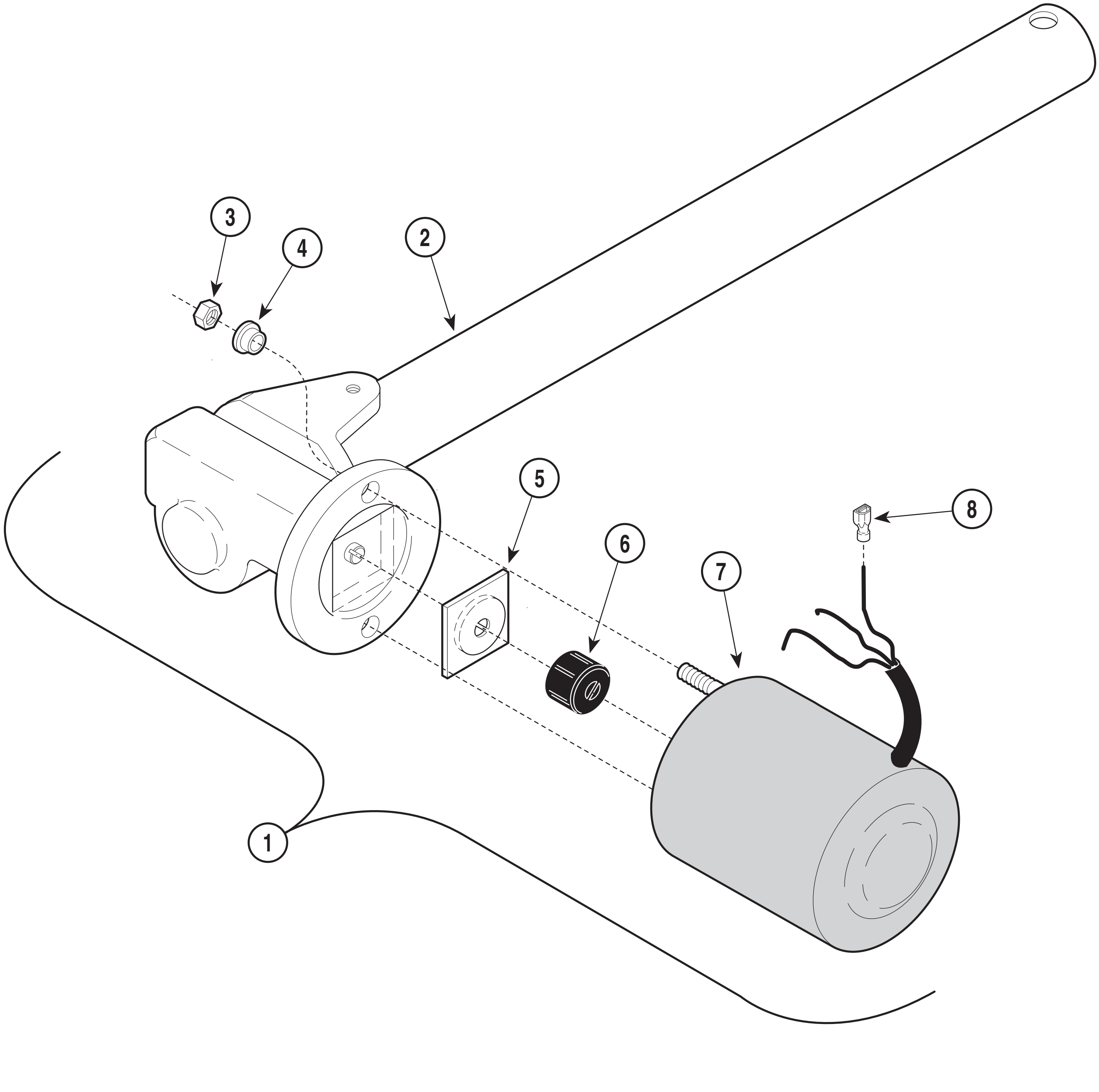

MA245200

Used on units with Serial Number BP1000 thru BP4789, BP4814 thru BP4957, BP5046 thru BP5062 and EP1000 thru EP1059

Item	Part No.	Description	Qty.
1	~~002-0296-00~~	Base Actuator Assembly (Included Items 2 thru 8, Replaced with 002-0565-00)	1
2	• ~~016-0338-01~~	• Actuator Mechanism	1
3	•	• Nut	2
4	• 053-0198-00	• Shoulder Washer	2
5	• 016-0237-00	• Actuator Brake	1
6	• 016-0509-00	• Motor Coupler	1
7	• 002-0574-06	• Motor	1
8	• 015-0312-00	• Nylon Coupler Terminals	3

Always Specify Model & Serial Number

Return To Table Of Contents

Base Actuator Assembly

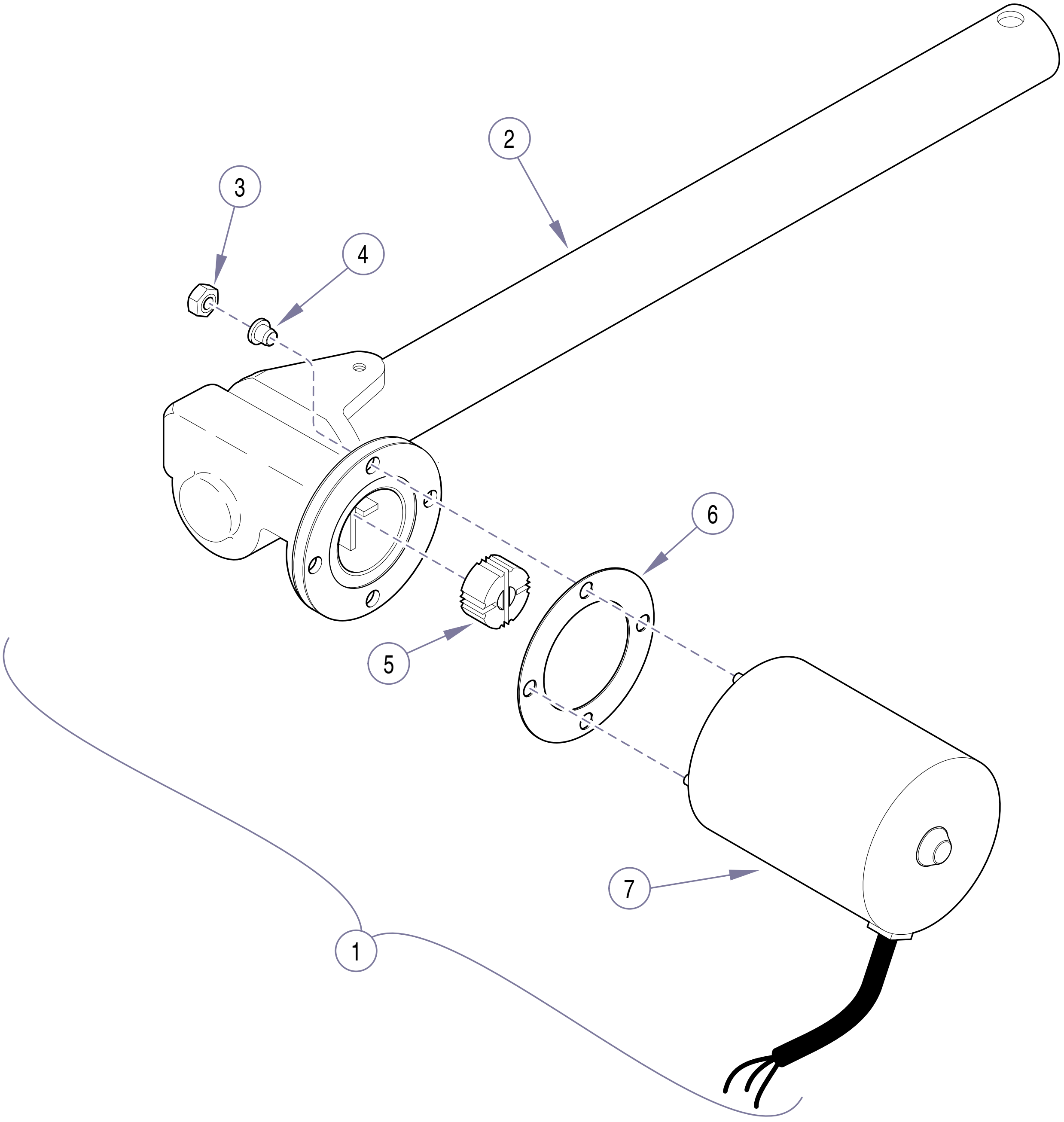

MA606600i

Used on units with Serial Number BP4790 thru BP4813, BP4958 thru BP5045, BP5050 thru BP5051, BP5063 thru Present and EP1060 thru Present
Used on units with Serial Number V2200 thru Present

Item	Part No.	Description	Qty.	Item	Part No.	Description	Qty.
1	002-0565-00	Base Actuator Assembly (Includes Items 2 thru 8)	1	5	• 016-0662-00	• Motor Coupler	1
2	•	• Actuator Mechanism	1	6	• 053-0834-00	• Insulator Coupling	1
3	• 041-0010-10	• Nut	4	7	• 015-1085-06	• Motor	1
4	• 053-0198-00	• Shoulder Washer	4	8	• 015-0312-00	• Nylon Coupler Terminal	3

Always Specify Model & Serial Number

Foot Control Assembly

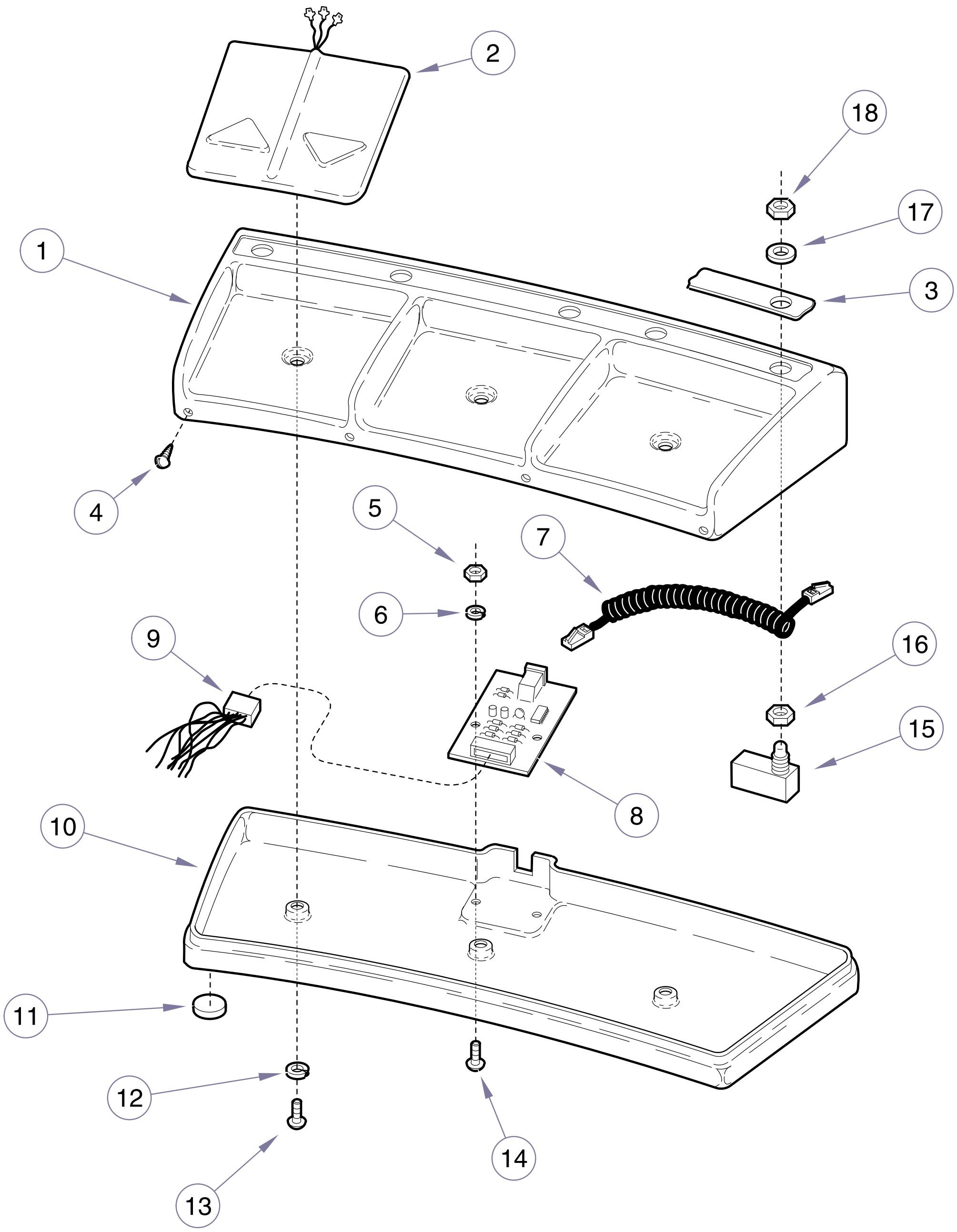

Used on units with Serial Number BP1000 thru BP1850

Item	Part No.	Description	Qty.
	9A97001	3 Station Foot Control Assembly (Includes Items 1 thru 15)	1
1	• 053-0309-00	• Foot Control Top Housing	1
2	• 015-0570-00	• Tape Switch (No Longer Available)	3
3	• 061-0223-00	• Foot Control Decal	1
4	• 040-0006-00	• Screw	8
5	• 041-0004-00	• Nut	2
6	• 045-0001-43	• Lockwasher	2
7	• 015-0505-03	• Coil Cord	1
8	• 015-0568-00	• PC Board	1

Item	Part No.	Description	Qty.
9	• 015-0572-00	• Wire Harness	1
10	• 053-0310-00	• Foot Control Bottom Housing	1
11	• 053-0013-00	• Self-Sticking Bumper	8
12	• 045-0001-35	• Lockwasher	3
13	• 040-0010-46	• Screw	3
14	• 040-0004-10	• Screw	2
15	• 015-0571-00	• Switch *(includes items 16 thru 18)*	5
16	• • 042-0634-02	• • Locknut	5
17	• • 042-0634-01	• • Internal Tooth Lockwasher	5
18	• • 042-0634-00	• • Face Nut	5

Always Specify Model & Serial Number

Return To Table Of Contents

Foot Control Assembly

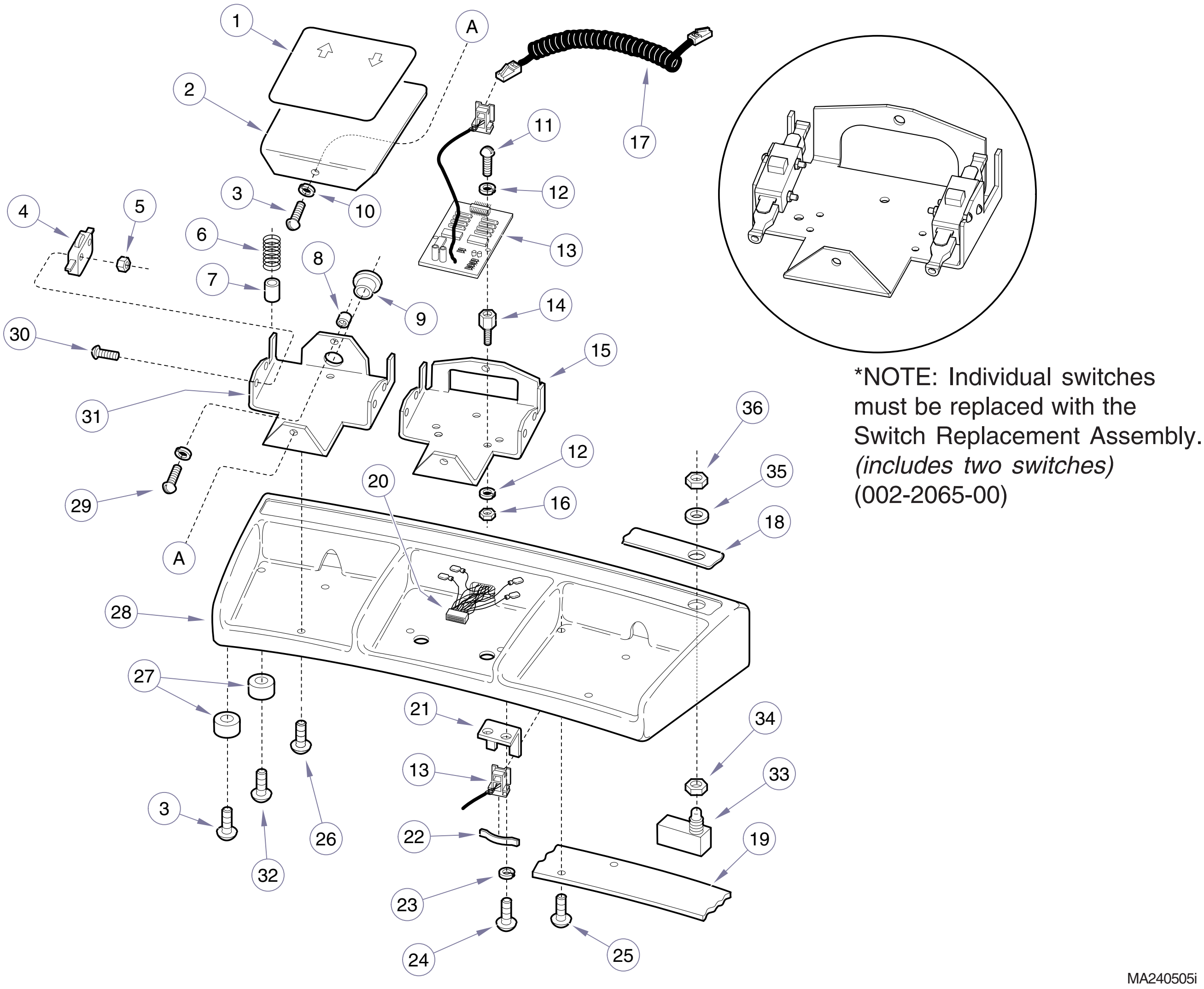

*NOTE: Individual switches must be replaced with the Switch Replacement Assembly. *(includes two switches)* (002-2065-00)

Used on units with Serial Number BP1851 thru Present
Used on units with Serial Number V2200 thru Present

Item	Part No.	Description	Qty.	Item	Part No.	Description	Qty.
	9A97002	3 Station Foot Control Assembly (Includes Items 1 thru 34)	1	20	• 015-0729-00	• Wire Harness (w/o blue jumper)	1
					• 015-0732-00	• Blue Jumper (not shown)	1
1	• 061-0382-00	• Pedal Decal	3	21	• 050-2072-00	• Receptacle Bracket	1
2	• 050-0941-04	• Footswitch Pedal	3	22	• 050-1544-00	• Spring Retaining Clip	1
3	• 040-0010-04	• Screw	5	23	• 045-0001-08	• Lockwasher	5
4	• 002-2065-00	• Switch* (See Note)	6	24	• 040-0010-04	• Screw	2
5	• 041-0003-01	• Nut	12	25	• 040-0010-47	• Screw	4
6	• 025-0009-00	• Spring	6	26	• 040-0010-52	• Screw	6
7	• 052-0010-00	• Spacer	6	27	• 053-0156-00	• Glide	6
8	• 052-0075-00	• Spacer	3	28	• 020-0143-01	• Foot Control Casting	1
9	• 053-0155-00	• Split Bushing (Early Units Only)	2	29	• 040-0010-36	• Screw	3
10	• 052-0076-00	• Spacer	3	30	• 040-0003-00	• Screw	12
11	• 040-0004-00	• Screw	2	31	• 002-2065-00	• Step Mount* (See Note)	2
12	• 045-0001-43	• Lockwasher	4	32	• 040-0010-35	• Screw	4
13	• 015-0568-01	• PC Board	1	33	• 015-0571-00	• Switch *(includes items 34 thru 36)*	5
14	• 015-0599-01	• Hex Standoff	2	34	• • 042-0634-02	• • Locknut	5
15	• 002-2065-00	• Step Mount* (See Note)	1	35	• • 042-0634-01	• • Internal Tooth Lockwasher	5
16	• 041-0004-00	• Nut	2	36	• • 042-0634-00	• • Face Nut	5
17	• 015-0505-03	• Coil Cord	1	37	002-0398-00	Stabilization Kit (Used on earlier version manufactured with (4) glides)	1
18	• 061-0327-00	• Decal (3 Station)	1				
19	• 050-0956-00	• Wire Channel Cover	1	38	002-0614-00	Footswitch Cover (Not Shown)	1

Always Specify Model & Serial Number

COMMENTS

The Technical Publications Department of Midmark Corporation takes pride in its publications. We are sure that our manuals will fill all of your needs when you are performing scheduled maintenance, servicing, or repairs on a Midmark product. However, if you find any errors or feel that there should be a change, addition, or deletion to a manual, please let us know!

Page(s) and Paragraph(s) Needing Changed:

Description of Error or Desired Change:

Please fax or mail a copy of this completed comment sheet to:

Midmark Corporation
ATTN: Technical Publications Department
60 Vista Drive
Versailles, Ohio 45380
Fax: (937) 526-5542

Return To Table Of Contents

FAX ORDERING FORM

(SERVICE PARTS ONLY)

NOTES:

- ALL BLOCKED AREAS MUST BE COMPLETED.
- USE FOR NON-WARRANTY FAX ORDERS ONLY. WARRANTY ORDERS MUST BE TELEPHONED IN (1-800-MIDMARK).

ATTENTION: SERVICE DEPARTMENT FAX#: 877-249-1793

ACCT #: ______________ P.O. #: ______________ DATE: ______________

NAME: ______________ SHIP TO: ______________

ADDRESS: ______________

CITY, ST.: ______________

CONTACT: ______________

PHONE: ______________

☐ NON-EMERGENCY ORDER - TO SHIP WITHIN 72 HOURS IF PART(S) IN STOCK.

☐ EMERGENCY ORDER - TO SHIP WITHIN 24 HOURS IF PART(S) IN STOCK (IF ORDER IS RECEIVED BEFORE 1:00 P.M. E.S.T).

SEND NOTIFICATION IF PARTS ARE NOT AVAILABLE TO SHIP WITHIN 24 HOURS VIA E-MAIL OR FAX TO: ______________

METHOD OF SHIPMENT

UPS	FED EX	OTHER
☐ NEXT DAY A.M.	☐ NEXT DAY A.M.	______________
☐ NEXT DAY P.M.	☐ NEXT DAY P.M.	
☐ 2ND DAY	☐ 2ND DAY	
☐ GROUND	☐ ECONOMY	

QTY.	PART #	DESCRIPTION (SPECIFY COLOR OF ITEM IF APPLICABLE)	COLOR CODE	PRICE/PER
			TOTAL COST: $	

©Midmark Corporation 2000 Rev. 1/07

Printed in U.S.A.

Return To Table Of Contents

Midmark Corporation
60 Vista Drive
P.O. Box 286
Versailles, Ohio 45380-0286
937-526-3662
Fax 937-526-5542
midmark.com

MIDMARK
Because we care.

Subject to change without notice.
Refer to www.Documark.com for latest revision.

© Midmark Corporation - 2005

Printed in U.S.A.